BIXOLON

User's Manual

XD5-40IItR Series

Desktop RFID Label Printer

Ver. 1.00

www.bixolon.com

Table of Contents

Copyright 4
WARNING & CAUTION 7
Manual Information 9
Printer Introduction 10

1. Content Confirmation 11

2. Product Part Names 12

3. Installation & Usage 14
3-1 Printer Installation Placings 14
3-2 Power Connection 15
3-3 Interface 17
3-3-1 Interface (USB & USB HOST & Serial & Ethernet) 18
3-4 Media Installation 19
3-5 Ribbon Installation 21
3-5-1 Type of Ribbon 21
3-5-2 Inserting a 1Inch Core Ribbon 22
3-5-3 Inserting a 0.5 Inch Core Ribbon 23
3-5-4 Knob Adjust Method According to Ribbon Type 23
3-5-5 Narrow Ribbon Installation 24
3-5-6 Ribbon Removal 25
3-5-7 Ribbon Sensor Activation 25
3-6 How to Use the Ribbon Guide 26
3-7 Button & LCD 27
3-7-1 Button Operation 27
3-7-2 Interface Status Icon 28
3-7-3 Menu Composition 29
3-7-4 Setting Menu Explanation 33
3-7-5 Interface Menu Explanation 37
3-7-6 Sensor Menu Explanation 42
3-7-7 Tools Menu Explanation 43
3-7-8 RFID Menu Explanation 50

4. Detailed Features 52
4-1 Pause/Cancel 52
4-1-1 Pause/Resume Function 52
4-1-2 Print Cancellation 52
4-2 Smart Media Detection 53
4-3 Gap Sensor Auto Calibration Mode 53
4-4 B/M Sensor Auto Calibration Mode 54
4-5 RFID Auto Calibration Mode 54
4-6 Media Sensor Manual-Calibration 55
4-7 Calculating the Position of RFID Transponder (coding) 57
4-8 Data Dump Mode 58
4-9 Factory Reset 58
4-10 SWC (Simple Wi-Fi Connect) 59
4-11 Print Standby Mode 60
4-11-1 About Print Standby Mode 60
4-11-2 How to switch the printer from Standby Mode to Print Ready Mode 60

4-12 Media Installation Method of Peeler (Option) Model 61
4-13 Using Fan-Fold or External Media 63
4-13-1 When using Fan-Fold media 63
4-13-2 When using Large media roll (Optional) 64
4-14 Auto Cutter (Optional) 65

5. Printer Maintenance 66
5-1 Cleaning Printer Head 66
5-2 Cleaning Sensors, Roller or/and media Path 67
5-3 Replacing Roller 68

6. Specifications 69
6-1 Printer Specifications 69
6-2 Label Types Specifications 70

Copyright

© BIXOLON Co., Ltd. All rights reserved.

This user manual and all property of the product are protected under copyright law.
It is strictly prohibited to copy, store, and transmit the whole or any part of the manual and any property of the product without the prior written approval of BIXOLON Co., Ltd.
The information contained herein is designed only for use with this BIXOLON product.
BIXOLON is not responsible for any direct or indirect damages, arising from or related to use of this information.

• The BIXOLON logo is the registered trademark of BIXOLON Co., Ltd.
• All other brand or product names are trademarks of their respective companies or organizations.

BIXOLON Co., Ltd. maintains ongoing efforts to enhance and upgrade the functions and quality of all our products.
In the following, product specifications and/or user manual content may be changed without prior notice.

Notice – EU

This wireless device is class A that is considered to be used in an industrial environment.

Caution

Some semiconductor devices are easily damaged by static electricity. You should turn the printer “OFF”, before you connect or remove the cables on the rear side, in order to guard the printer against the static electricity. If the printer is damaged by the static electricity, you should turn the printer “OFF”.

This equipment is not suitable for use in locations where children are likely to be present.

If the battery is not replaced correctly, there is a risk of explosion. Replace only with the same model or equivalent product specified by the manufacturer. When the battery is used up, be sure to tape the terminals and insulate them and dispose at the designated place in accordance with the relevant laws and ordinances set by the state.

Mise en garde

Cet appareil n’est pas adapté d’utilser dans des endroits où des enfants sont probablement d'être présents.
Si la batterie n'est pas remplacée correctement, il existe un risque d'explosion. Remplacez-la

uniquement avec le même modèle ou un produit équivalent approuvé par le fabricant. Lorsque la batterie est épuisée, veillez à coller du ruban adhésif sur les bornes, à l’isoler et à la jeter de manière adéquate, conformément aux lois et réglementations locales et nationales en vigueur.

Compliance information

This device complies with Part 15 of the FCC Rules. Operation is subject to the following two conditions: (1) This device may not cause harmful interference, and (2) This device must accept any interference received, including interference that may cause undesired operation.

This equipment has been tested and found to comply with the limits for a Class A digital device pursuant to Part 15 of the FCC Rules. These limits are designed to provide reasonable protection against harmful interference when the equipment is operated in a commercial environment. This equipment generates uses, and can radiate radio frequency energy and, if not installed and used in accordance with the instruction manual, may cause harmful interference to radio communications. Operation of this equipment in a residential area is likely to cause harmful interference in which case the user will be required to correct the interference at his own expense.

Caution: Exposure to Radio Frequency Radiation.
To comply with FCC RF exposure compliance requirements, a separation distance of at least 20 cm must be maintained between the antenna of this device and all persons.

Caution: Any Changes or modifications not expressly approved by the manufacturer could void the user's authority to operate the equipment.

Class A Digital Device : Wired Device
This Apparatus complies with class “A” limits for radio interference as specified in the Canadian department of communications radio interference regulations.

This Class A digital apparatus complies with Canadian ICES-003.

Appareil numérique de classe A: appareil filaire
Get appareil est conforme aux normes class “A” d’interference radio tel que specifier par ministre canadien des communications dans les reglements d’interference radio.

Cet appareil numérique de la classe A est conform à la norme NMB-003 du Canada.

Waste Electrical and Electric Equipment (WEEE)

This marking shown on the product or its literature, indicates that is should not be disposed with other household wastes at the end of its working life, To prevent possible harm to the environment or human health from uncontrolled waste disposal, please separate this from other types of wastes and recycle it responsibly to promote the sustainable reuse of material resources. Household users should contact either the retailer where they purchased this product, or their local government office, for details of where and how they can take this item for environmentally safe recycling. Business users should contact their supplier and check the terms and conditions of the purchase contract. This product should not be mixed with other commercial wastes for disposal.

WARNING & CAUTION

It describes death, physical injuries, serious financial losses, and damage to data etc. that can be caused to the user.

Do not connect multiple products to one single power outlet. Do not connect the product to a loose power outlet.
Use only power outlets that meet the standard. Connect the power cord only to a grounded power outlet. **Noncompliance may cause electric shock or fire.**

Use only authentic products from BIXOLON. **The company will not provide post-sale support for damage or other quality issues that any fake (refurbished) products may incur.**

Do not bend or strain the power cord excessively. Push the power cord all the way into the power outlet lest it remain loose. Make sure to hold the cord tight when separating it from the power outlet. Do not remove the power cord while the product is in use.
Noncompliance may cause electric shock or fire.

Keep small accessories or other packaging materials away from young children.
Beware: children may swallow them.
Mishandling the product may incur injuries. If a child has swallowed any such thing, see a doctor at once.

Do not touch the power cord with wet hands when pulling it from a power outlet.
If the power plug or outlet is smeared with extraneous matter, wipe it with a dry cloth.
Noncompliance may cause electric shock or fire.

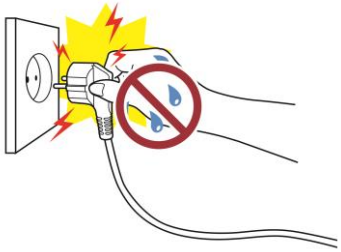

Do not allow the product to be damaged by heavy objects.
Noncompliance may cause electric shock or fire.

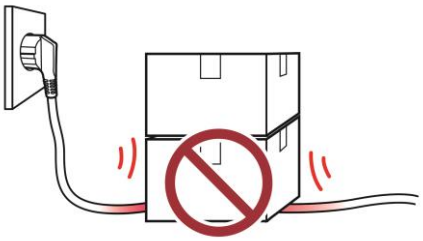

If the product emits a strange sound, burning smell, or smoke, turn off the power immediately and unplug the power cord. If the product is dropped or its exterior is damaged, turn off the power immediately and unplug the power cord. Do not subject the product to shock. **It may start a fire. It may damage the product.**

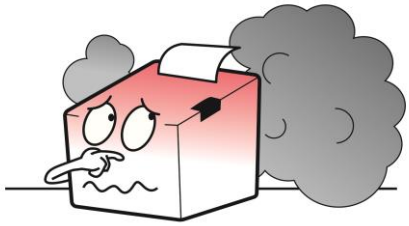

Install the product in a well-ventilated place by keeping it a certain distance from the wall. The product installed in certain places such as where a lot of fine dust is generated, where the temperature is too high or too low, where there is a lot of moisture or water, and at airports or stations that are used continuously for a long time may suffer serious quality problems due to the influence of the surrounding environment. **An increase in internal temperature may start a fire. Be sure to contact the place of purchase before installing the product.**

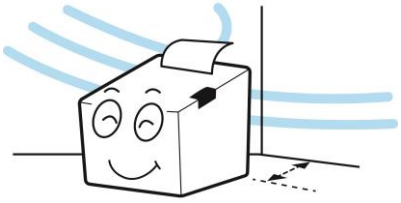

Install the product in a fixed place preventing it from tipping over. When moving the product, turn off the power and disconnect all cables connected to the product, including the power cord. **It may damage the product.**

Never disassemble, repair, or modify the product at your own discretion. **When repair is necessary, contact the place of purchase.**

Do not let any foreign substances enter the product. Do not place heavy objects, liquids, or metals on the product. **It may start a fire.**
It may damage the product.

If there is a problem with the product, please contact the place of purchase. In addition, Bixolon website (http://www.bixolon.com) provides product repair.

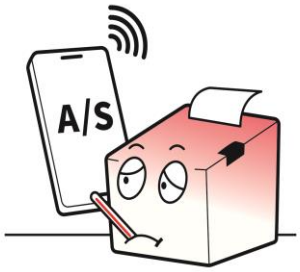

Manual Information

This manual provides basic information on printers and provides ways to install, use, and check them.
In order to protect the safety of users and prevent property damage, be fully familiar with this manual before using the product. Please use it.

1. Windows Driver Manual
   This manual provides information on the installation instructions and main functions of the windows driver.
2. Unified Label Utility-II Manual
   This manual provides information on the usage of software for function selection of this product, operating condition modification, etc.
3. Programming(SLCS) Manual
   This manual provides information on label printer commands.
4. Programming(RFID) Manual
   This manual provides information on label printer RFID commands.
5. True Font Downloader Manual
   This manual provides information on the usage of the font downloader that can download true type fonts and facilitate their usage as device fonts.
6. Network Connection Manual
   This manual provides information on the configuration and usage of network interface.
7. Bluetooth Connection Manual
   This manual provides information on connection instructions the Bluetooth interface.
8. Label Design Program Manual
   This manual provides information on the usage of the Windows PC program that can make labels by adding text, graphics, or barcodes at desired positions.

Manual Symbol Introduction

⚠	Precaution & Warning	It describes death, physical injuries, serious financial losses, and damage to data etc. that can be caused to the user.
!	Note	It provides additional information on the function and performance of the product.

Printer Introduction

XD5-40IItR series printers have been designed to be connected to various types of electronic devices such as computer peripheral devices.

The main features of the printer are as follows

1. Desktop Label Printer
2. Thermal Transfer / Direct Thermal Printing
3. XD5-40IItR: Max 8ips(203mm/sec) printing speed
   XD5-43IItR: Max 6ips(152mm/sec) printing speed
4. Print Width/Length: 108mm/1,000mm(XD5-40IItR), 105.7mm/1,000mm(XD5-43IItR)
5. Media Width/Outer Diameter/Inner Diameter/Thickness: 15~118mm/127mm/ 1.0~1.5 inch/0.06~0.2mm
6. Ribbon Width/Length/Type: Max 110mm/300m/Outside(Wax, Wax/Resin, Resin)
7. Gap Sensor, Movable Black Mark & Notch Sensor
8. 256MB LPDDR/ 256MB NAND Flash
9. 2 inch FSTN LCD
10. 211 x 285 x 188 (W x D x H)
11. Support for multiple interfaces
    - Standard(Wire): USB & USB HOST & Serial & Ethernet
    - Option(Wireless): Bluetooth, WLAN
12. Option : Peeler, Auto Cutter
13. RFID Support

Product Symbol Introduction

	DC (Direct current)
	USB
	Ethernet

1. Content Confirmation

The following items should all be contained in the printer package.
Contact the dealer from which the purchase was made if any item is damaged or missing.

XD5-40IItR/43IItR Model

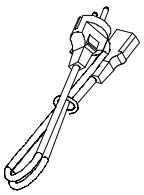

Power Cord

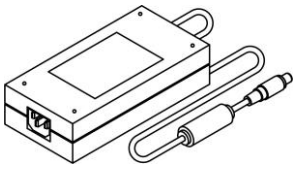

AC/DC Adapter

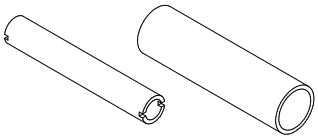

Core(0.5 inch, 1 inch)

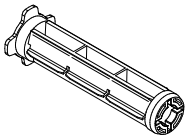

Holder Ribbon(2ea)

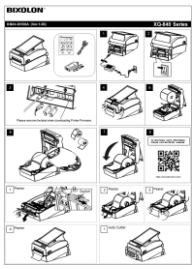

Quick Manual

USB Cable

※ Optional

Serial(RS-232C) Cable

2. Product Part Names

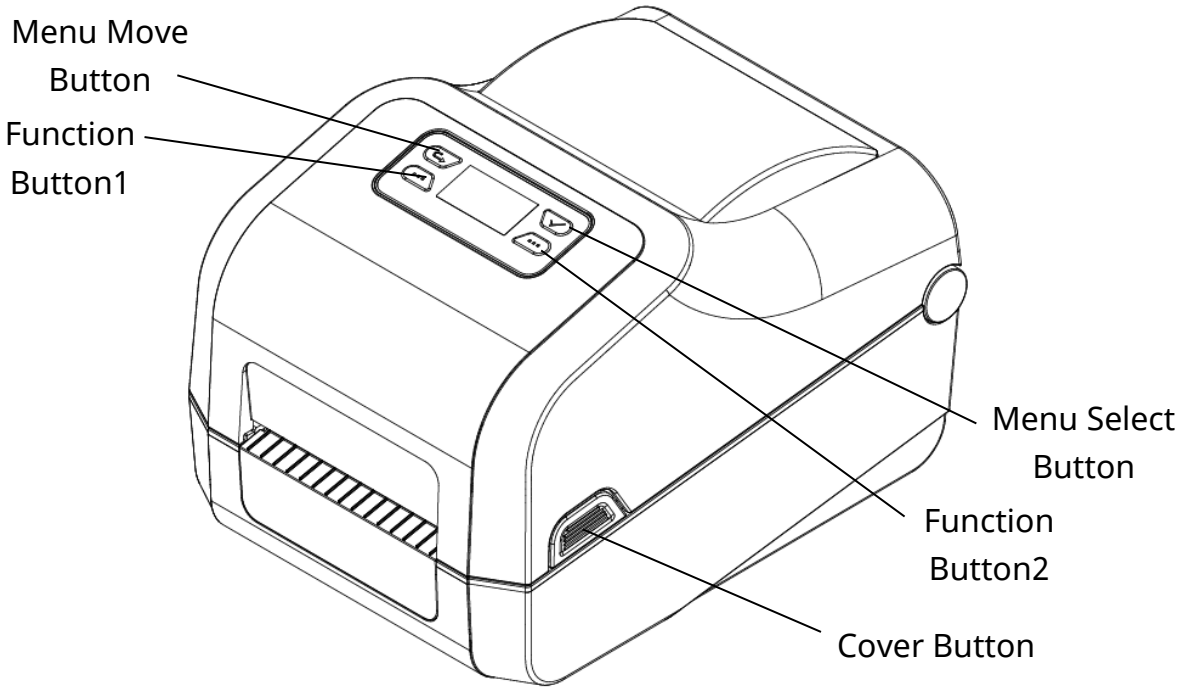

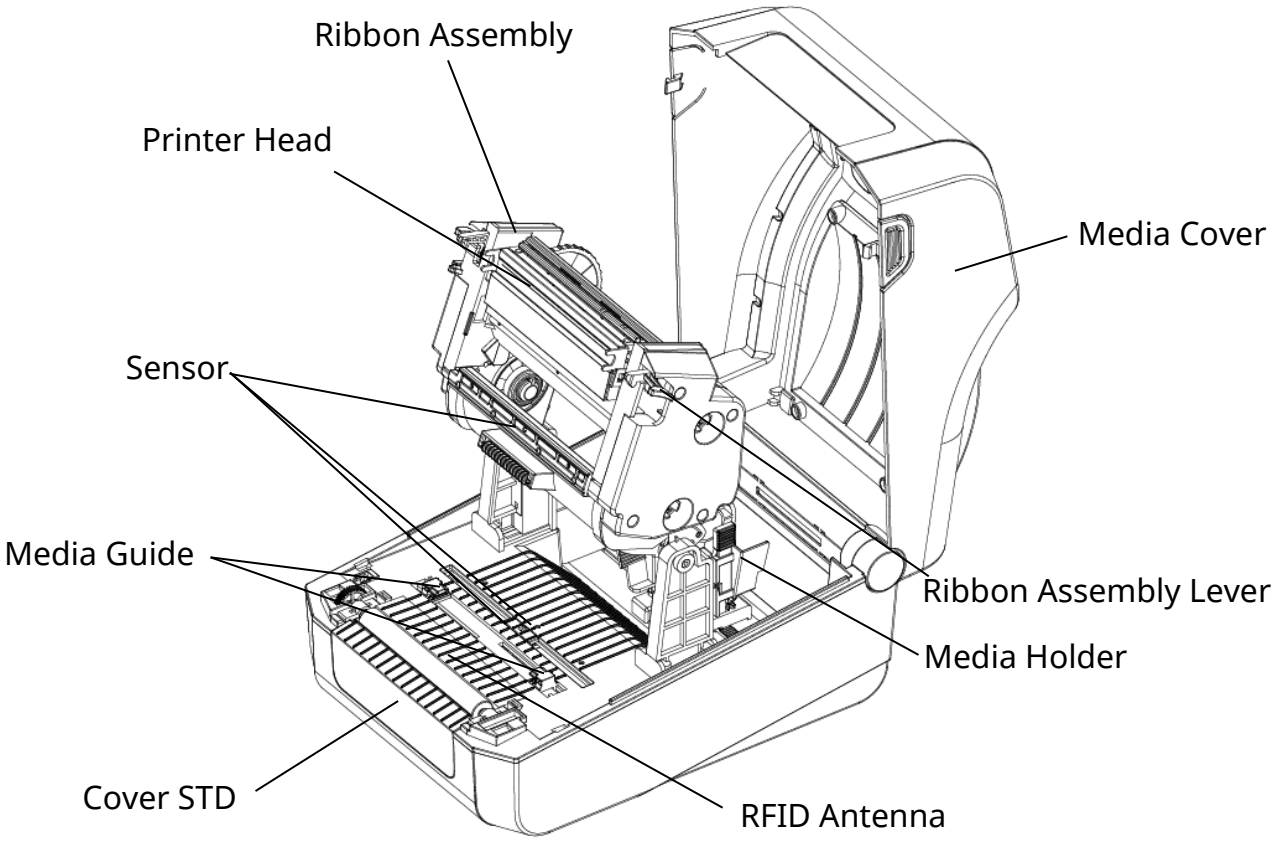

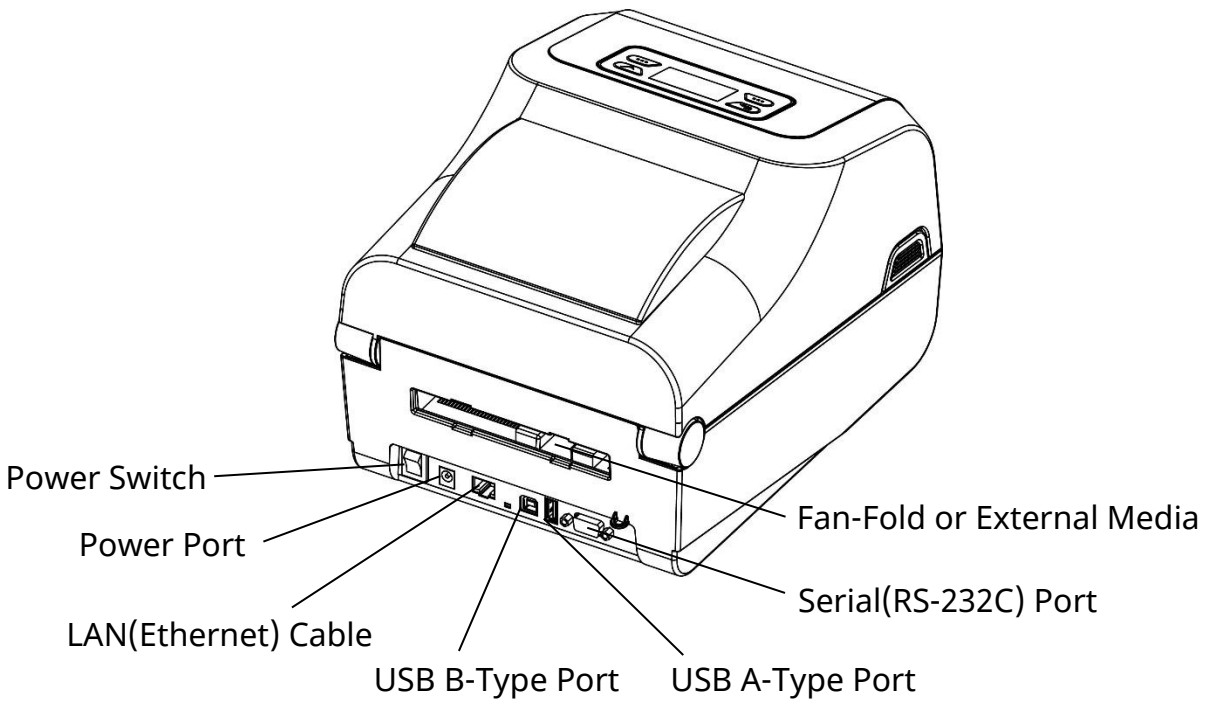
Power Switch
Power Port
LAN(Ethernet) Cable
USB B-Type Port
USB A-Type Port
Fan-Fold or External Media
Serial(RS-232C) Port

3. Installation & Usage

3-1 Printer Installation Placings

• Install the printer in a location that meets the following conditions.

- Allow sufficient space around the printer for proper ventilation.

- Install the printer on a flat and level surface.

- Avoid humid environment.

3-2 Power Connection

• Connect power to the printer as shown below.

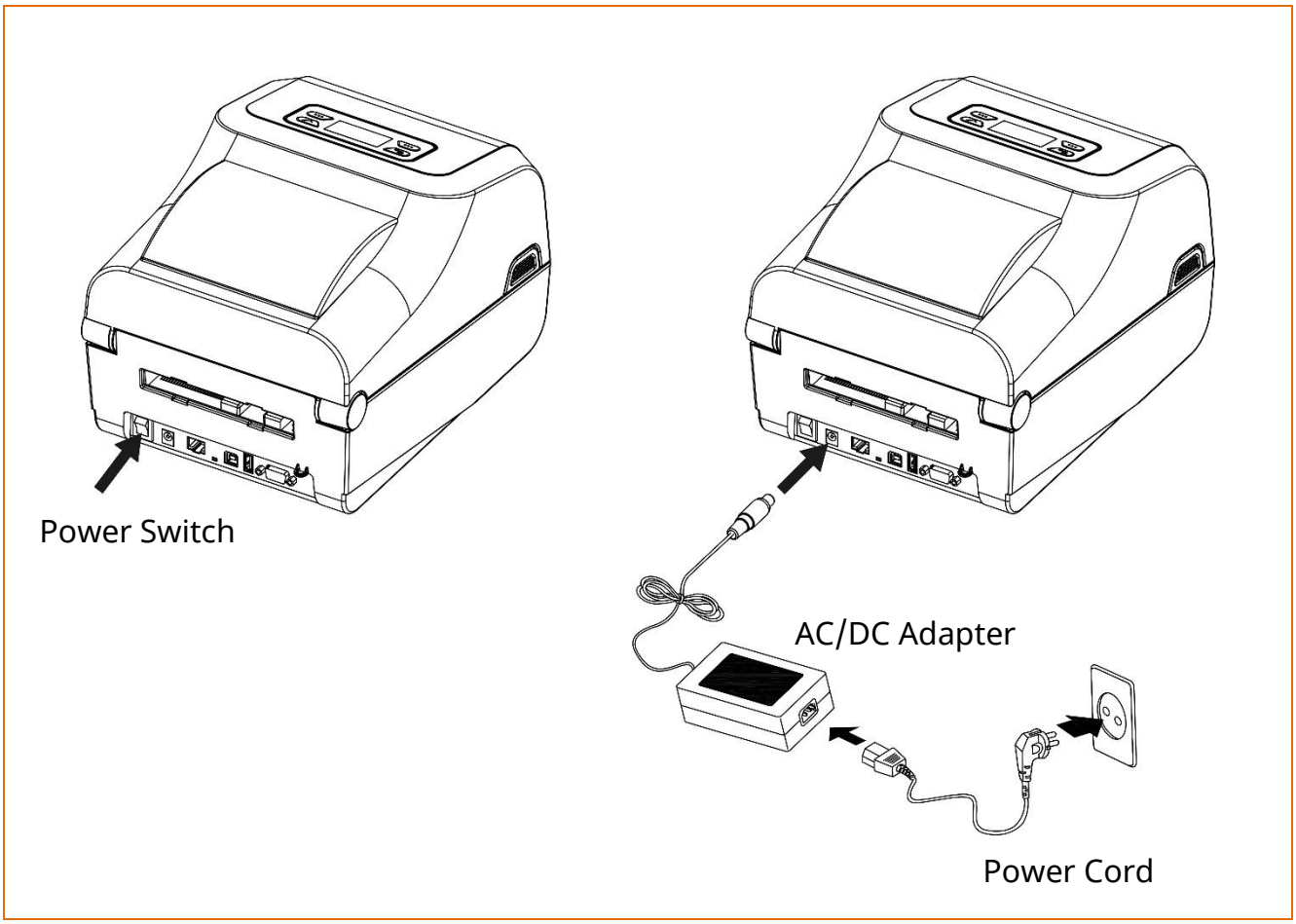

1) Turn off the printer power switch.

2) Check to see that the AC/DC adapter voltage matches that of the power source.

3) Connect the AC/DC adapter jack to the printer power port.

4) Connect the power cord to the AC/DC adapter.

5) Connect the power cord to a power source/outlet.

- Only use a power supply provided by BIXOLON.
  BIXOLON shall bear no responsibility for damage caused by using a third-party power supply.
- Check the power supply's label to check its electronic specs.
- For the safety of people and equipment, please use the appropriate power cord for your country or region.
- When removing the power supply, make sure you have a firm grasp of power connector and the printer, then pull horizontally.
- Be sure to turn off the printer before connecting the power connector to the printer. This can cause serious electrical damage and bodily injury.
- Do not operate the printer and power supply in a humid environment. This can cause serious electrical damage and bodily injury.
- Do not connect an input voltage beyond the specifications of the power supply. This may result in product damage and fire.

3-3 Interface

Shielded cables must be used to prevent radiation and reception of electrical noise. Use the shortest possible communication cable to minimize the detection of electrical noise in the cable.

- Serial(RS-232C) Cable (1.8m or less recommended)
- USB B-Type Cable (1.8m or less recommended)
- LAN(Ethernet) Cable (3m or less, CAT-5 or higher UTP Cable)

- Connecting unshielded communication cables is in violation of EMC standards. Use the cable approved by us.
- Do not bundle the communication cable with objects that may cause electrical noise and interference. The printer may be damaged.
- After turning off the power switch of printer, connect and disconnect the communication cable.
This can cause serious electrical damage and bodily injury.

3-3-1 Interface (USB & USB HOST & Serial & Ethernet)

Connect the interface cable as shown below.
This printer supports the following interfaces.

- Serial(RS-232C) Cable
- LAN(Ethernet) Cable
- USB B-Type Cable
- USB A-Type (storage)

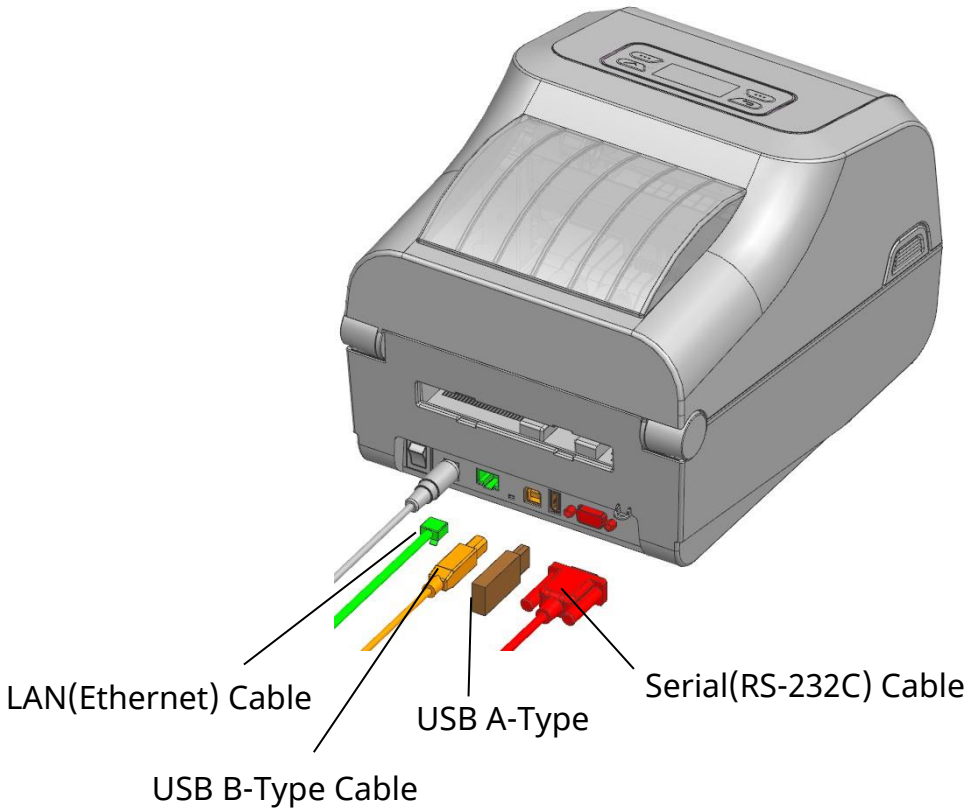

1) Turn off the power switch.

2) Connect the communication cable to the printer communication port to be used.
- Connect the serial(RS-232C) cable to the serial port and tighten the screw on both sides.
- Connect the LAN(Ethernet) cable to the Ethernet port.
- Connect USB B-Type cable to the USB port.

Be aware that the product's electronic components may be damaged due to discharging of electrostatic energy that accumulates on the surface of the body or other objects.

3-4 Media Installation

1) Open the media cover as push the cover button on both sides of the media cover.

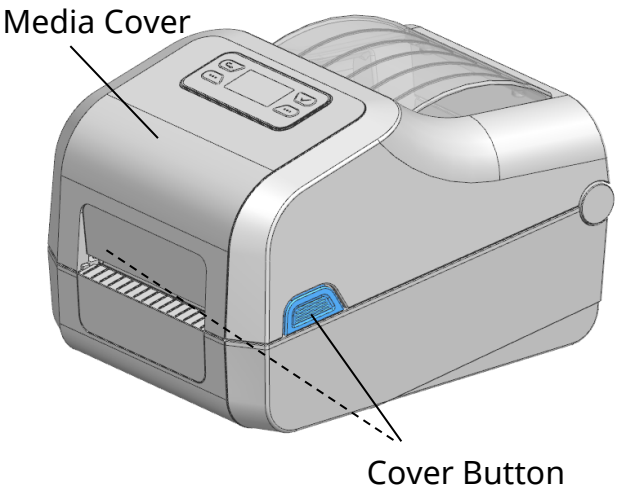

2) Spread the media holder and insert media as shown.

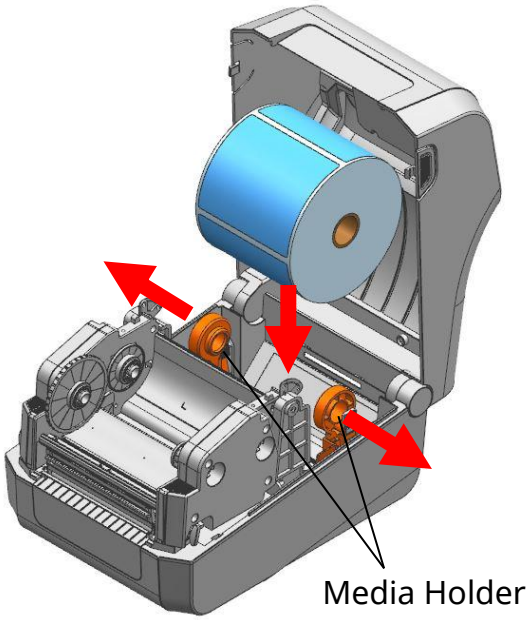

3) Pull the ribbon assembly lever on both sides of the ribbon assembly and open the ribbon assembly.

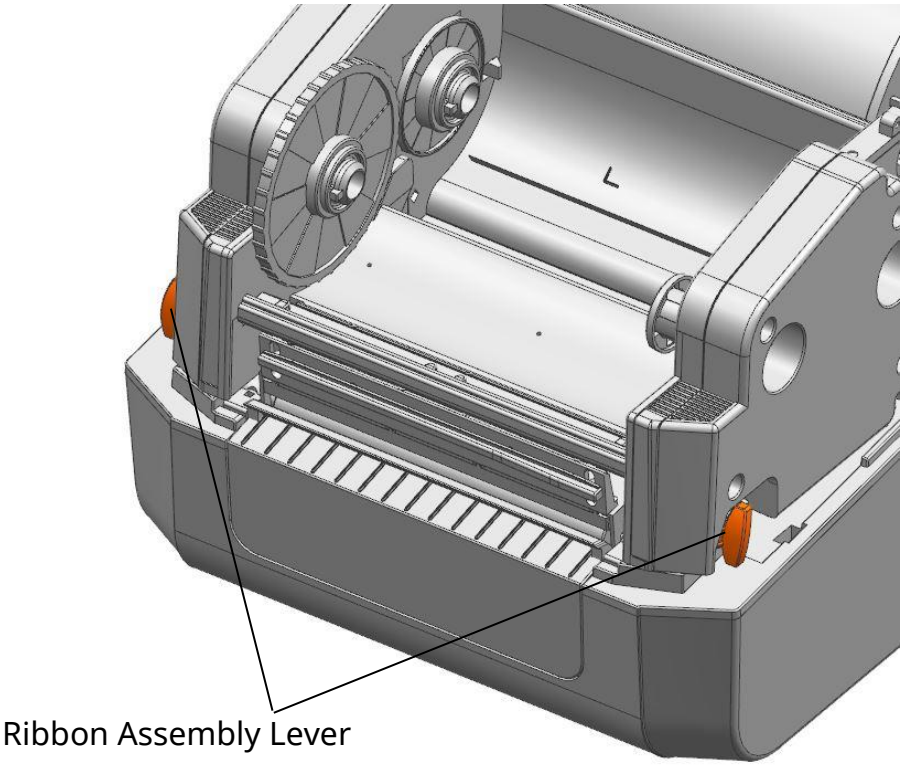

4) Pull the media out to the front of printer.
Adjust the media guides to the width of the media.
* Whether the media is rolled outside or inside, the printing side must faced up.

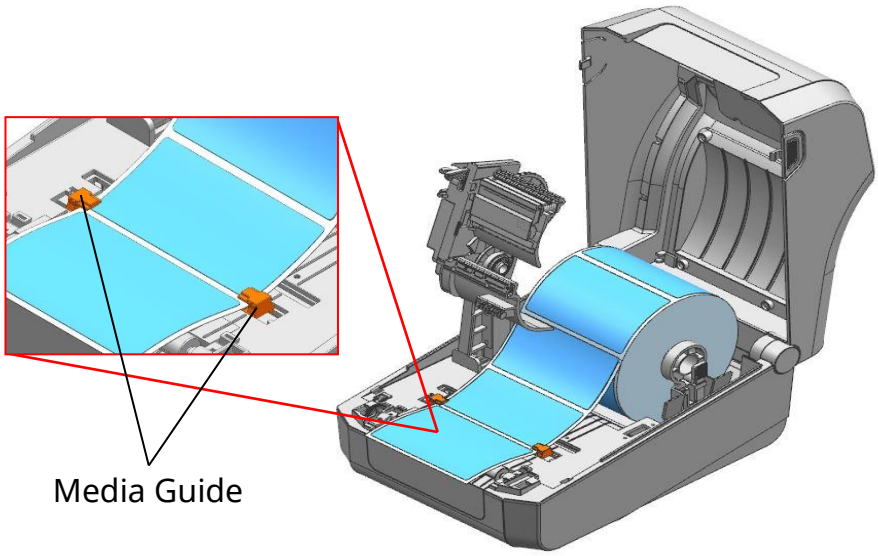

5) If you use black mark or notch media roll, please lift up the media and match the sensor position to the black mark or notch.

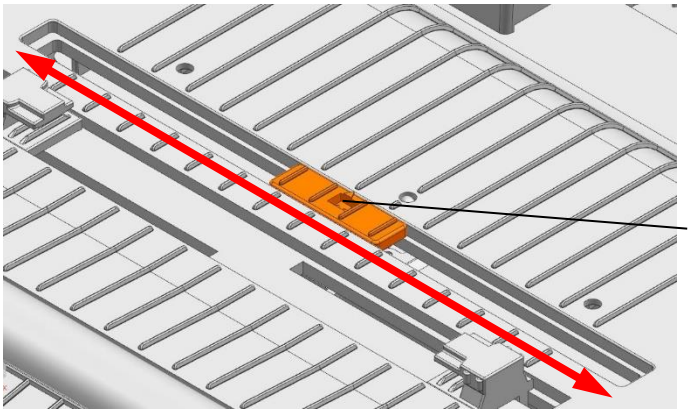

- When opening or closing the cover, be careful not to pinch your fingers.
- Do not open the print head levers while the printer is printing. The printer may be damaged.
- Change the media when the printer is not receiving data, or data may be lost.
- The print head gets extremly hot while printing or after the printing, this can cause serious burns.Do not touch the print head.

3-5 Ribbon Installation

3-5-1 Type of Ribbon

1) Type by Film Coating Location
   - This printer supports ribbons facing outward only.

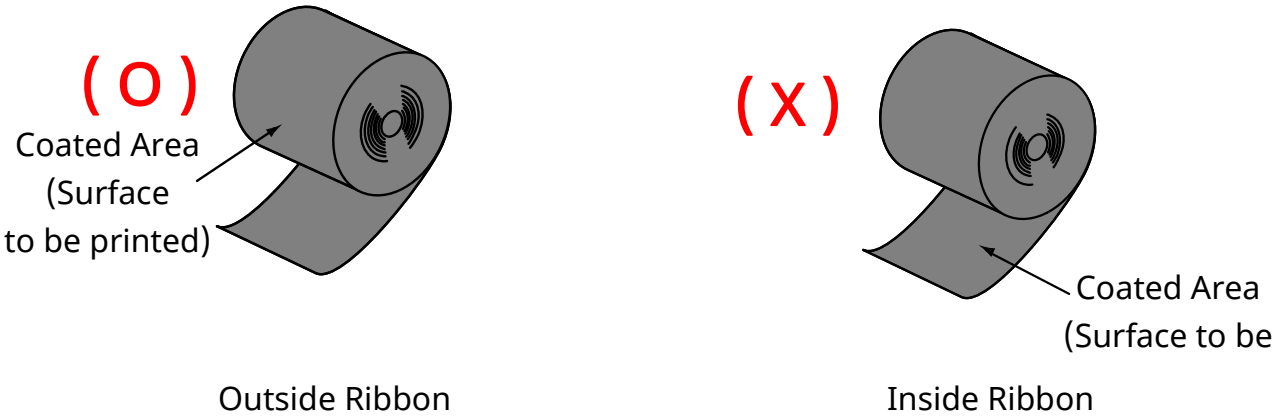

Outside Ribbon　　Inside Ribbon

Follow the procedure described below to determine the coating surface of the ribbon.

• Ribbon test using adhesive material
  - Perform contact test in order to determine which side is coated if there are useable labels.

• Complete the following steps to carry out the contact test
  - Remove the liner from the label
  - Put a piece of adhesive surface of the label on the outer/inner surface of the ribbon, and apply pressure.
  - Remove the label from the ribbon
  - Check whether adhesive surface of the label is stained by black ink ribbon.

2) Type by Roll Core
- This printer can be used to 1 inch or 0.5 inch core ribbon.
- For a 1 inch core, a roll core must be used.
- The holder ribbon and roll core of the fully used ribbon must be reused. Do not discard.

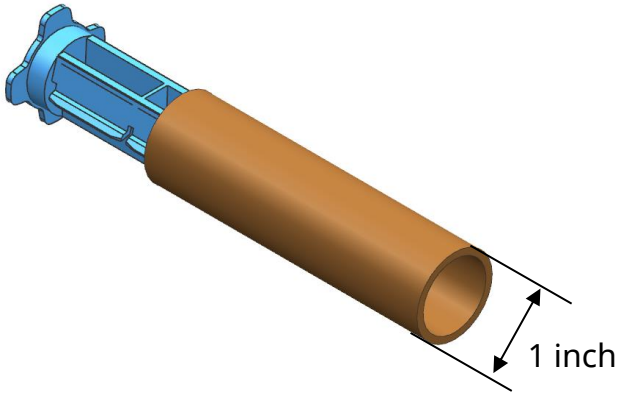

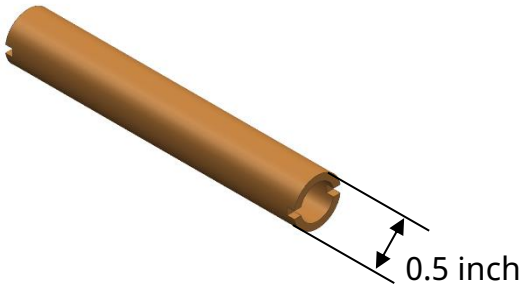

3-5-2 Inserting a 1Inch Core Ribbon

1) Insert the Holder Ribbon into the core and ribbon. (keep note of ribbon printing direction)

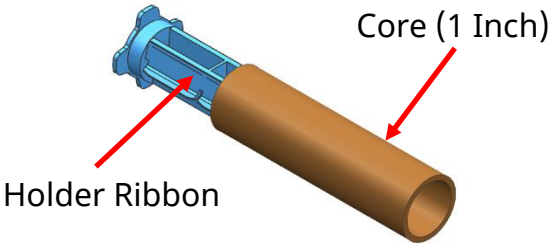

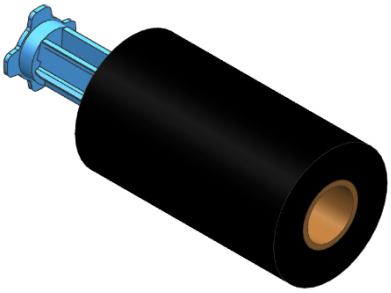

2) Open the ribbon assembly and insert the ribbon and core by pushing to the right.

3) Apply tape to the core of the ribbon.

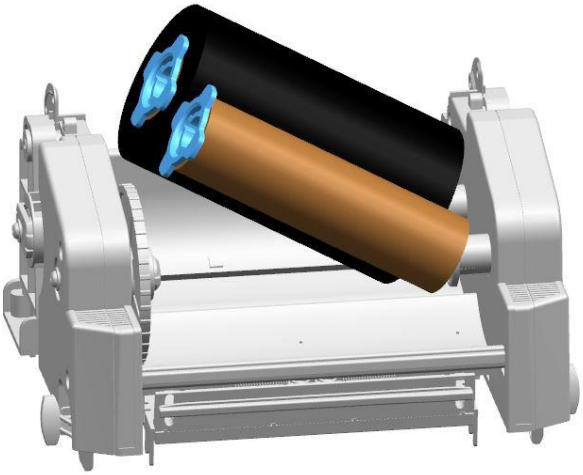

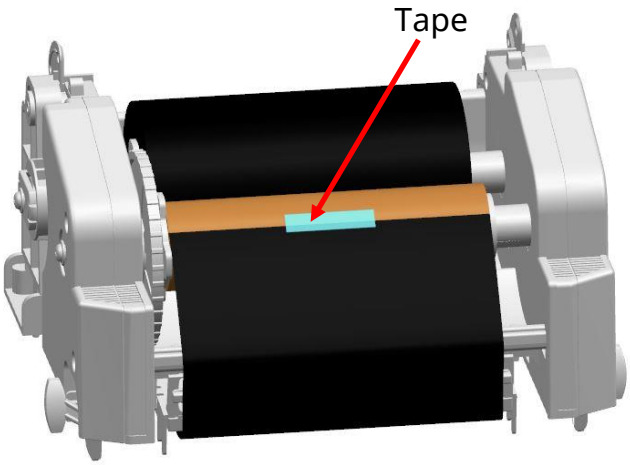

4) Close the ribbon assembly.

3-5-3 Inserting a 0.5 Inch Core Ribbon

1) Open the ribbon assembly and insert the ribbon and core by pushing to the right. (keep attention of ribbon printing direction)

2) Apply tape to the core of the ribbon.

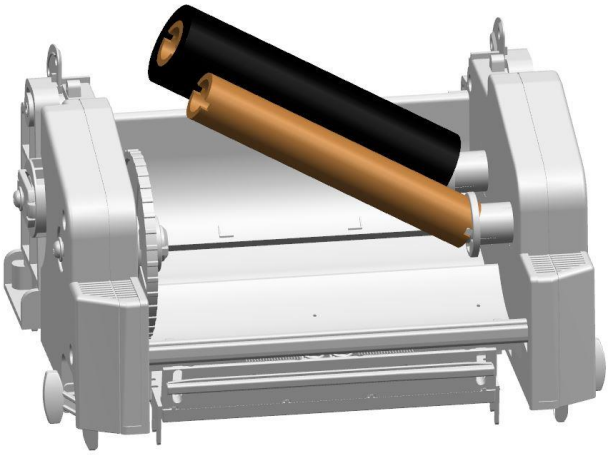

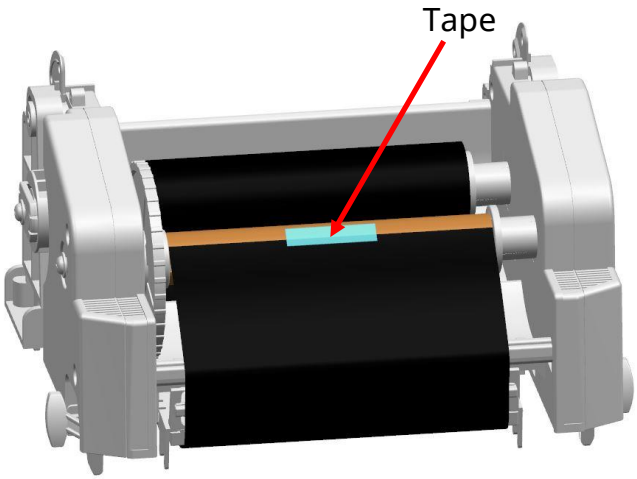

3-5-4 Knob Adjust Method According to Ribbon Type

Use printer after adjusting knob correctly, according to ribbon length and width.
PUSH-UP state of knob to which being inward is the factory default specification and you can push or pull the knob.
Please note that push or pull operation affects print quality and operation.

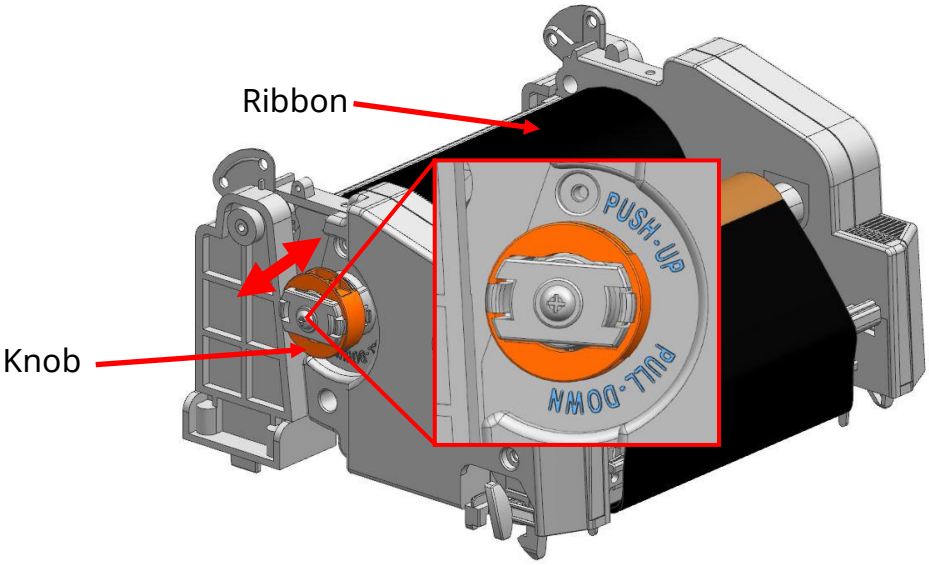

Knob Status	Ribbon Type	
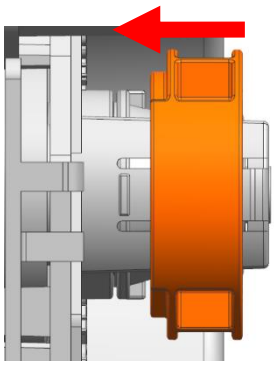 PUSH-UP	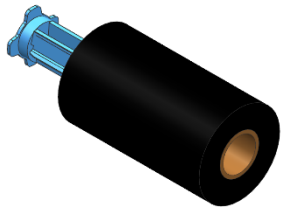 ≈ 300m **(1 inch core)** Ribbon	
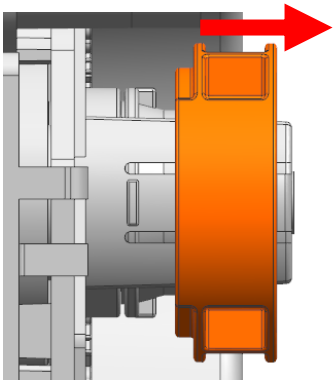 PULL-DOWN	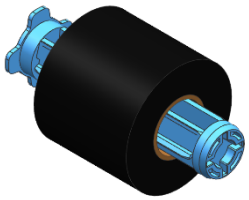 ≈ Under 2 Inches Width **(1 inch Core)** Ribbon	 ≈ 74m **(0.5 inch Core)** Ribbon

3-5-5 Narrow Ribbon Installation

When using ribbons of widths of 110mm or lower, install in a centered position on the holder ribbon.

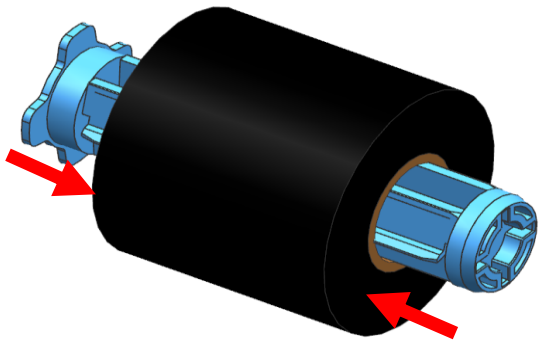

3-5-6 Ribbon Removal

1) Cut the ribbon.
2) Open the ribbon assembly and remove the ribbon and core by pushing to the right.
3) Remove the holder ribbon from the ribbon and core.

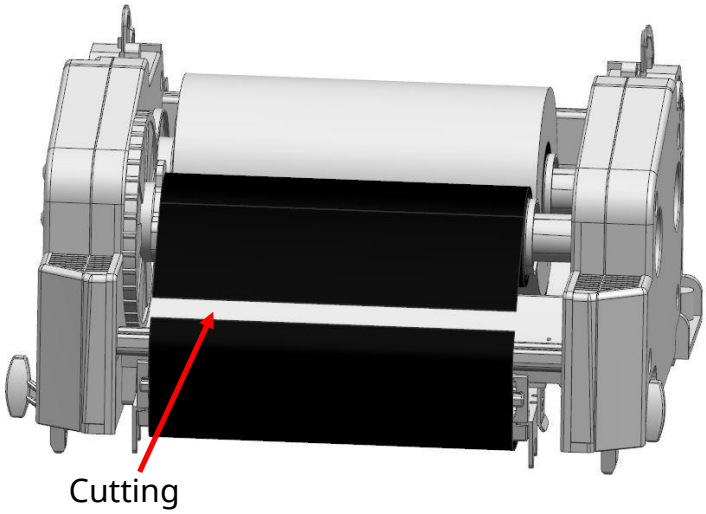

3-5-7 Ribbon Sensor Activation

Check the settings related to ribbon detection sensor if printing does not stop when the printer is out of ribbon or ribbon is broken.

* Ribbon detection sensor can be enabled by command control. And default setting can be changed by Unified Label Utility-II.

- **When replacing a ribbon, keep affixed the core of the fully used ribbon to the ribbon coiling portion on the other side and do not discard as its use is required.**
- **As the ribbon holder is required for continuous use, make sure not to misplace it.**

3-6 How to Use the Ribbon Guide

Wrinkles can be improved by adjusting on the ribbon guides.

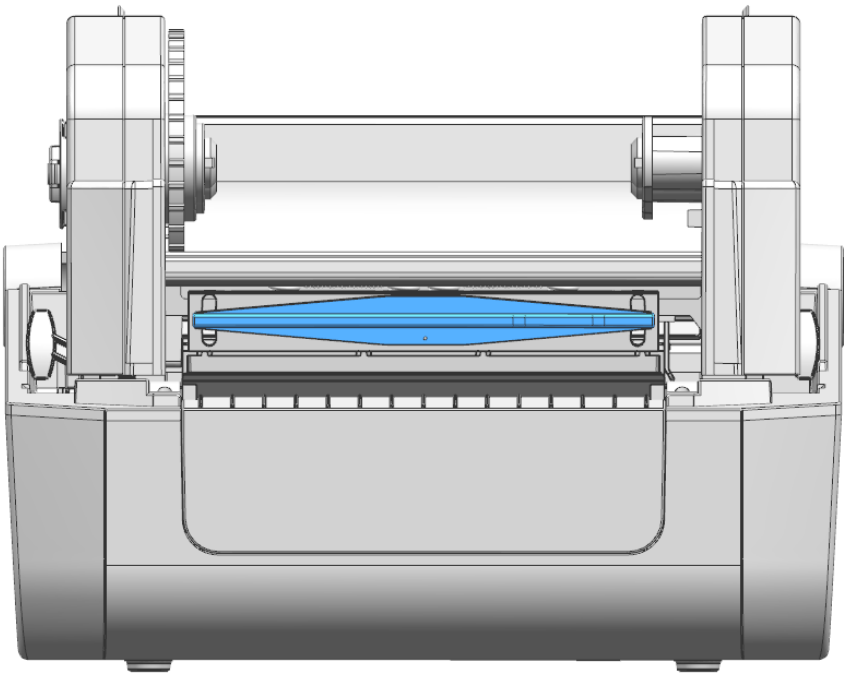

Media Printing Status	Adjustment Method
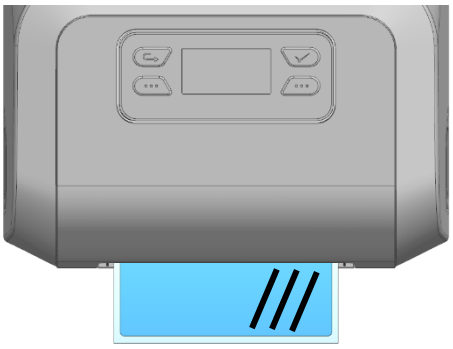 Wrinkles on the Right	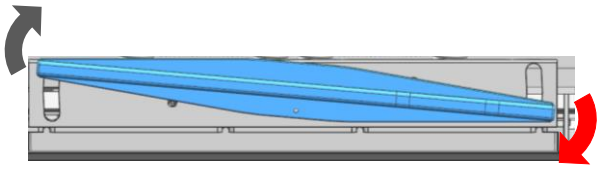 Lower the right side of the guide.
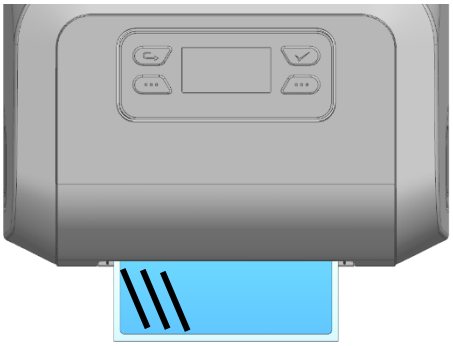 Wrinkles on the Left	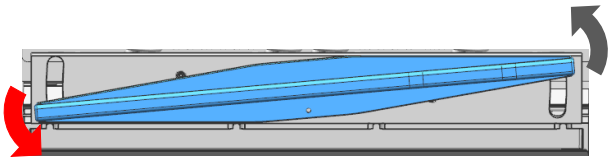 Lower the left side of the guide.

Do not adjust ribbon guide while the printer is printing.
The printer may be damaged.

3-7 Button & LCD

3-7-1 Button Operation

Printer state before operation	Button	Explanation
Print Ready	Menu Move	Move to the next menu (The menu moves from the top left to the bottom right)
Print Ready	Menu Select	Select menu or change value
In Menu or Print Ready	Function Button 1	Pause , Print, Save, Main screen display
In Menu or Print Ready	Function Button 2	Feed, Cancel, Previous screen display

3-7-2 Interface Status Icon

User can check the status and setting information through the LCD.

Icon	Explanation
	Bluetooth is not connected to the host
	Bluetooth is connected to the host
	Authentication is failed
	Not connected to AP
	Connected to AP, Strength: 4
	Connected to AP, Strength: 3
	Connected to AP, Strength: 2
	Connected to AP, Strength: 1
	Ethernet is connected
	USB storage is connected

3-7-3 Menu Composition

Setting	Sub menu
	Width (Print Width)
	Length (Print Length)
	Direct (Print Direction)
	Speed (Print Speed)
	Density (Print Density)
	Method (Print Method)
	Type (Media Type)
	Tear off (Tear Off)
	Offset (Print Offset)
	Mode (Print Mode)
	Pwr act (Power Up Action)
	Head cls (Print Head Close)

Interface	Sub menu			
	Serial	Baud Rate		
		Data Bit		
		Parity		
		Stop Bit		
		Handshk (Host Handshake)		
	Ethernet	IP Protocol		
		IP Address		
		Subnet Mask		
		Gateway		
		MAC Address		
	WLAN	Channel		
		Network		
		ESSID (AP ID)		
		Auth (Authentication)		
		Encrypt (Encryption)		
		WEP Password		
		PSK Password		
		IP Protocol		
		IP address		
		Subnet Mask		
		Gateway		
		SWC (Simple Wi-Fi Connect)	Execute SWC	
			Print App URL	
	Bluetooth	Device Name		
		Pairing	Pincode	
			SSP (Secure Simple Pairing)	
		MAC Address		
		Mode	BLE (Bluetooth Low Energy)	
			STD (Standard Mode)	Connect Mode
				Auth&Enc (Authentication & Encryption)

Sensor	Sub menu
	Gap Cal (Gap Calibration)
	Black Mark Cal (Black Mark Calibration)

Tools	Sub menu		
	Self prt (Self-Test)		
	Reset (Factory Reset)		
	Dump (Data Dump Mode)		
	Head Chk (Printer Head Check)		
	USB Num (USB Serial Number)		
	Demo prt (Demo Print)		
	Files	Saved (Saved File)	Template
			Image
			Fonts (Download Fonts)
			E Drive (Flash Memory)
			A Drive (USB Storage)
		Twin (Twin Function)	PRT Set (Printer Setting)
			Template
			Image
			Fonts (Download Fonts)
		F/W Update	
	Info (Printer Information)		
	Support		

RFID	Sub menu	
	Setting (RFID Setting)	Position(Transponder Position)
		Power(Read/Write Power)
		NumRetry(Number of retry)
		NumLabel(Number of label)
	RFID Cal (RFID Calibration)	
	TEST (RFID Test)	Write
		Read
	Info (RFID Information)	Valid Count
		Void Count

3-7-4 Setting Menu Explanation

Menu	Explanation
Width **(Print Width)**	**Explanation** Setting media width[dots] Function to adjust image buffer size according to print width **Default Value** - 203dpi : 864 dots (108mm) - 300dpi : 1,248 dots (105.7mm) **Maximum Value** - 203dpi : 864 dots (108mm) - 300dpi : 1,248 dots (105.7mm)
Length **(Print Length)**	**Explanation** Setting media length[dots] Function to adjust image buffer size according to print length **Default Value** 203dpi : 1,225 dots (153mm) 300dpi : 1,811 dots (153mm) **Maximum Value** - 203dpi : 8,000 dots (1,000mm) - 300dpi : 11,820 dots (1,000mm)

Direct **(Print Direction)**	**Explanation** Setting print direction Top to bottom: Printing from top to bottom Bottom to Top: Printing from bottom to top **Default Value** Bottom to Top **Variable Value** Bottom to Top, Top to Bottom Printing Direction 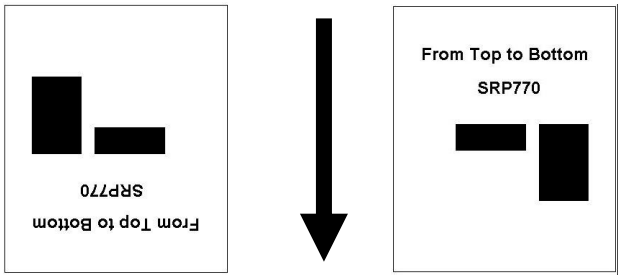 Top to bottom Bottom to top
Speed **(Print Speed)**	**Explanation** Setting print speed[ips] **Default Value** 203dpi : 6ips 300dpi : 4ips **Variable Value** - 203dpi : 3~8ips - 300dpi : 2~6ips

Density (Print Density)	**Explanation** Setting print density **Default Value** 203dpi : 20 300dpi : 20 **Variable Value** 0~30
Method (Print Method)	**Explanation** Setting print method **Default Value** Trans(Thermal Transfer) **Variable Value** Direct (Direct Thermal), Trans(Thermal Transfer)
Type (Media Type)	**Explanation** Setting media type **Default Value** Gap **Variable Value** - Gap - Black Mark - Continuous
Tear off	**Explanation** Setting media position[dots] for tear off after printing or feed **Default Value** 0 **Variable Value** -100 ~ 100

Offset (Print Offset)	**Explanation** Setting top print position[dots] **Default Value** 0 **Variable Value** -100 ~ 100
Mode (Print Mode)	**Explanation** Setting print mode suitable to the printer option **Default Value** Tear off **Variable Value** Tear off, Cutter
Pwr act (Power Up Action)	**Explanation** Setting the action for the printer after the power-up sequence. **Default Value** NO FEED **Variable Value** NO FEED, FEED, CAL LENGTH (Media Calibration), LABEL LENGTH (Setting Media Length)
Head cls (Print Head Close)	**Explanation** Setting the action for the printer when you close the printer cover. **Default Value** STANDBY **Variable Value** STANDBY, NO FEED, FEED, CAL LENGTH (Media Calibration), LABEL LENGTH (Setting Media Length)

3-7-5 Interface Menu Explanation

3-7-5-1 Serial

List	Explanation
Baud Rate	**Explanation** Setting the baud rate **Default Value** 115200 **Variable Value** 9600, 19200, 38400, 57600, 115200
Data Bit	**Explanation** Setting the data bit **Default Value** 8 **Variable Value** 7, 8
Parity	**Explanation** Setting the parity **Default Value** None **Variable Value** Even, Odd, None
Stop Bit	**Explanation** Setting the stop bit **Default Value** 1BIT **Variable Value** 1BIT, 2BIT
Handshk (Handshake)	**Explanation** Setting the handshake **Default Value** RTS_CTS **Variable Value** RTS_CTS, DTR_DSR, XON_XOFF

3-7-5-2 Ethernet

List	Explanation
IP Protocol	**Explanation** Setting IP assignment method **Default Value** DHCP **Variable Value** DHCP, Static IP
IP Address	**Explanation** Setting IP Address method **Default Value** Static IP: 192.168.192.123 DHCP: 0.0.0.0 **Variable Value** 0 ~ 255
Subnet Mask	**Explanation** Setting subnet mask **Default Value** Static IP: 255.255.255.0 DHCP: 0.0.0.0 **Variable Value** 0 ~ 255
Gateway	**Explanation** Setting gateway **Default Value** Static IP: 192.168.192.254 DHCP: 0.0.0.0 **Variable Value** 0 ~ 255
MAC Address	**Explanation** Indicating MAC address

3-7-5-3 WLAN

List	Explanation
Channel	**Explanation** Setting channel when creating Adhoc network **Default Value** 6 **Variable Value** 1 ~ 14
Network	**Explanation** Setting WLAN operation mode **Default Value** SoftAP **Variable Value** SoftAP, Infra(Infra structure), Adhoc, P2P
ESSID (AP ID)	**Explanation** Setting the ID of AP to be accessed
Auth (Authentication)	**Explanation** Setting WLAN authentication method **Default Value** Open **Variable Value** Open, Shared Key, WPA1PSK, WPA2PSK, WPA1EAP, WPA2EAP
Encrypt (Encryption)	**Explanation** Setting WLAN encryption method **Default Value** None **Variable Value** None, WEP64/128, TKIP, AES, AES+TKIP
WEP Password	**Explanation** Setting WEP password
PSK Password	**Explanation** Setting PSK password

IP Protocol	**Explanation** Setting IP assignment method **Default Value** DHCP **Variable Value** DHCP, Static IP	
IP address	**Explanation** Setting IP address **Default Value** Static IP: 192.168.1.1 DHCP: 0.0.0.0 **Variable Value** 0 ~ 255	
Subnet Mask	**Explanation** Setting subnet mask **Default Value** Static IP: 255.255.255.0 DHCP: 0.0.0.0 **Variable Value** 0 ~ 255	
Gateway	**Explanation** Setting gateway **Default Value** Static IP: 192.168.1.254 DHCP: 0.0.0.0 **Variable Value** 0 ~ 255	
SWC	Execute SWC	**Explanation** Connecting printers to network environments using SWC(Simple Wi-Fi Connect) mode
	Print App URL	**Explanation** Site linking(QR code) for SWC technical support

3-7-5-4 Bluetooth

List			Explanation
Device Name			**Explanation** Name of Device
Pairing	Pincode		**Explanation** Changes required pin code to connect
	SSP (Secure simple pairing)		**Explanation** Secure simple pairing **Default Value** Disable **Variable Value** Disable, Just Works, Numeric Comparison, Passkey Entry
MAC Address			**Explanation** Bluetooth device MAC address
Mode	BLE (Bluetooth Low Energy)		**Explanation** Bluetooth Low Energy **Default Value** Disable **Variable Value** Disable, Enable
	STD (Standard Mode)	Connect Mode	**Explanation** Setting Bluetooth connection mode **Default Value** Mode2 **Variable Value** Mode1, Mode2, Mode3
		Auth&Enc (Authentication &Encryption)	**Explanation** Setting Bluetooth authentication and encryption function **Default Value** Enable **Variable Value** Enable, Disable

3-7-6 Sensor Menu Explanation

List	Explanation
Gap Cal (Gap Calibration)	**Explanation** Detect media gap automatically.
Black Mark Cal (Black Mark Calibration)	**Explanation** Detect media black mark automatically.

3-7-7 Tools Menu Explanation

<table>
<tr><th>List</th><th colspan="3">Explanation</th></tr>
<tr><td>Self prt
(Print Self-Test)</td><td colspan="3">Explanation
Prints for self-test</td></tr>
<tr><td>Reset
(Factory Reset)</td><td colspan="3">Explanation
Initializes the printer settings to factory default</td></tr>
<tr><td>Dump
(Data Dump Mode)</td><td colspan="3">Explanation
The received data check when the printer does not work properly.

Default Value
Disable

Variable Value
Disable, Enable</td></tr>
<tr><td>Head Chk
(Print Head Check)</td><td colspan="3">Explanation
Dot-out check of head through printing</td></tr>
<tr><td>USB Num
(USB Serial Number)</td><td colspan="3">Explanation
Checks USB serial number</td></tr>
<tr><td>Demo prt
(Demo Print)</td><td colspan="3">Explanation
Demo format printing function</td></tr>
<tr><td rowspan="10">Files</td><td rowspan="5">Saved
(Saved File)</td><td>Template</td><td rowspan="5">Refer
3-7-7-1
Saved File</td></tr>
<tr><td>Image</td></tr>
<tr><td>Fonts (Download Fonts)</td></tr>
<tr><td>E Drive (Flash Memory)</td></tr>
<tr><td>A Drive (USB Storage)</td></tr>
<tr><td rowspan="4">Twin
(Twin Function)</td><td>PRT Set (Printer Setting)</td><td rowspan="4">Refer
3-7-7-2
Twin Function</td></tr>
<tr><td>Template</td></tr>
<tr><td>Image</td></tr>
<tr><td>Fonts (Download Fonts)</td></tr>
<tr><td colspan="2">F/W Update</td><td>Refer
3-7-7-3
F/W Update</td></tr>
<tr><td>Info</td><td colspan="3">Explanation
Checking the printer usage information</td></tr>
<tr><td>Support</td><td colspan="3">Explanation
Site linking(QR code) for technical support.</td></tr>
</table>

3-7-7-1 Saved File

Displays the list of object files stored in the printer.

List	Explanation
Template	Template list stored in the printer
Image	Image list stored in the printer (*.pcx)
Fonts (Download Fonts)	Download font list stored in the printer
E Drive (Flash memory)	Saved object files in E drive
A Drive (USB memory)	Saved object files in A drive

3-7-7-2 Twin Function

Saves the current printer settings, save files (templates, images, download fonts) to another printer using USB, or loads the settings of another printer.

List	Explanation
PRT Set (Printer Setting)	**Explanation** Save printer settings to a USB storage device, or load the print settings from USB storage. **File path** F:\configuration • **Save Function Explanation** - Connect a USB storage to the printer. - Select Save on the menu using the move button( ) and select button( ). - The printer_config file is created in the configuration folder of USB storage device. (The configuration folder is automatically created) • **Load Function Explanation** - Check whether the printer_config file exists in the configuration folder of the USB storage device. - Connect the USB storage to the printer. - Select Load on the menu using the move button( ) and select button( ). - Loading message(Loading...) is displayed while loading, and when loading is completed, USB loading completion(Load Ok) message is displayed. - Check the changes of the printer's settings.

Template	**Explanation** Save template files to a USB storage device, or load the templates from USB storage. **File path** F:\ USER_AREA_TEMPLATES • **Save Function Explanation** - Connect a USB storage to the printer. - Select Save on the menu using the move button( ) and select button( ). - Template files are stored in the USER_AREA_TEMPLATES folder of USB storage device. (USER_AREA_TEMPLATES folder is automatically created) • **Load Function Explanation** - Check whether a template files exist in the USER_AREA_TEMPLATES folder of the USB storage device. - Connect the USB storage to the printer. - Select Load on the menu using the move button( ) and select button( ). - Loading message(Loading...) is displayed while loading, and when loading is completed, USB loading completion (Load Ok) message is displayed. - Go to Save File menu then, check the template files are saved to the printer.

Image	**Explanation** Save image files to a USB storage device, or load the images from USB storage (*.pcx) **File path** F:\ USER_AREA_PCXImages • **Save Function Explanation** - Connect a USB storage to the printer. - Select Save on the menu using the move button( ) and select button( ). - Image files are stored in the USER_AREA_PCXImages folder of USB storage device. (USER_AREA_PCXImages folder is automatically created) • **Load Function Explanation** - Check whether the image files exist in the USER_AREA_PCXImages folder of the USB storage device. - Connect the USB storage to the printer. - Select Load on the menu using the move button( ) and select button( ). - Loading message(Loading...) is displayed while loading, and when loading is completed, USB loading completion (Load Ok) message is displayed. - Go to Save File menu then, check the image files are saved to the printer.

Fonts (Download Fonts)	**Explanation** Save download font files to a USB storage device, or load the download font from USB storage. **File path** F:\ USER_AREA_FONTS • **Save Function Explanation** - Connect a USB storage to the printer. - Select Save on the menu using the move button( ) and select button( ). - Download Font files are stored in the USER_AREA_FONTS folder of USB storage device. (USER_AREA_FONTS folder is automatically created) • **Load Function Explanation** - Check if the downloaded font files exist in the USER_AREA_FONTS folder of the USB storage device. - Connect the USB storage to the printer. - Select Load on the menu using the move button( ) and select button( ). - Loading message(Loading...) is displayed while loading, and when loading is completed, USB loading completion (Load Ok) message is displayed. - Go to Save File menu then, check the download font files are saved to the printer.

3-7-7-3 F/W Update

Firmware can be updated through USB storage.

F/W Update	**Explanation** Printer firmware update available using the USB storage directly without any communication. **File path** F:\ FW_DOWNLOAD **File name** “XD5-4xIItR_Vxx.xx_STD_mmddyy.fls” in F:\ FW_DOWNLOAD folder. (203dpi : x is 0 / 300dpi : x is 3) • **Download process explanation** - Check firmware file(*.fls) is in FW_ DOWNLOAD folder of USB storage. - Connect USB storage to the printer. - Select “F/W Update” from the “Files” menu. - Select “Start” from the “F/W Update” menu using the function button 1 ( ). - If message “F/W Update” is displayed, the firmware download has started normally. - After firmware update complete successfully, printer will be rebooted automatically.

3-7-8 RFID Menu Explanation

List		Explanation
Setting	Position (Transponder Position)	**Explanation** RFID transponder position can be set to match RFID label characteristics. **Default Value** 0(dot) **Default Value** -300 ~ +8000 (203dpi) -450 ~ +12000 (300dpi)
	Power (Read/Write Power)	**Explanation** Read/Write transceiver power of RFID module. **Default Value** 15(*10dbm) **Default Value** 0 ~ 30
	NumRetry (Number of retry)	**Explanation** Set the number of retries when RFID coding fails. **Default Value** 3 **Default Value** 0 ~ 10
	NumLabel (Number of label)	**Explanation** Set the number of retry labels when RFID coding fails **Default Value** 2 **Default Value** 0 ~ 10

RFID Cal (RFID Calibration)	Explanation Automatically calibrate transponder position and transceiver power of RFID labels
TEST (RFID TEST)	Explanation RFID write and read test function with transponder position and power set value
Info (RFID Information)	Explanation Check or reset saved RFID void/valid value.

4. Detailed Features

4-1 Pause/Cancel

• During multiple-page print jobs, Function button 1( ) and Function button 2( ) can be used to pause printing and cancel the print job altogether, respectively.

4-1-1 Pause/Resume Function

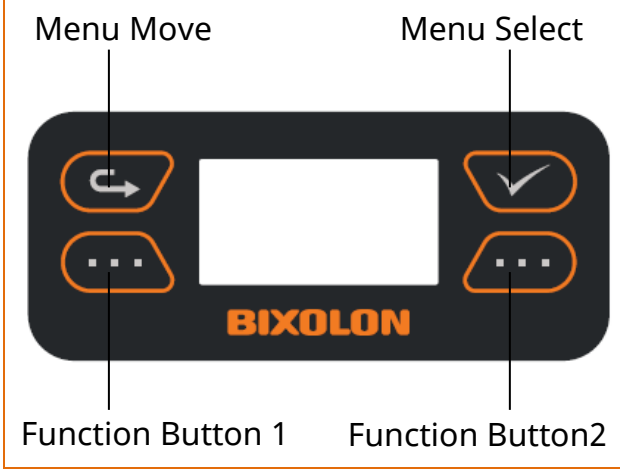

1) When printing, press the Function button 1( ).

2) The printer will pause after finishing the current media printing and the status of LCD will be as follows.
   - LCD Display: PAUSE

3) While the print job is paused, press the Function button 1( ) again to resume printing.

4-1-2 Print Cancellation

The following processes occur in the print cancellation mode.
- All label printing cancelled
- All data received in the printer communications buffer deleted.
- All received data deleted.

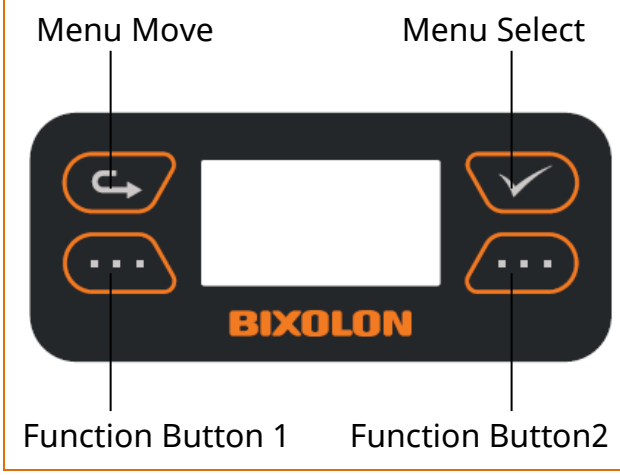

1) During printing and/or pause mode, press the Function button 2( ) enters the print cancellation mode.

2) The LCD Status in the print cancellation mode can be as follows.
   - LCD Display: Press Cancel

3) While in the print cancellation mode, press the Function button 2( ) again to return to print ready mode.

Contact the authorized dealer if the printer does not execute pause/resume function.

4-2 Smart Media Detection

• Media with gap and black mark can be identified without additional settings.

• 3~5 pages of media will be used depending on the types of media.

• Smart Media Detection function is executed in the followings cases
- When the printer is installed first time, it is executed by pressing Function button 2( )
- If the printer is installed first time, printer command will execute Smart Media Detection.
- When change of media length or type is detected during feeding or printing.
- When the different media type command is entered from the configured media type.
- After factory reset.

> If smart media detection fails, please proceed gap or B/M sensor auto-calibration accordingly

4-3 Gap Sensor Auto Calibration Mode

• Gap sensor auto calibration mode is used when the printer does not detect a gap on the media correctly.

Generally a printer is set to detect most types of gap but sometimes it fails to detect and keep feeding the media without a stop when special media used. In such case, use gap sensor auto calibration mode function for a proper detection.

1) Make sure that media roll has been installed properly.

2) In print ready mode the setting menu and move to Sensor → Gap Cal(Gap Calibration) and press Function button 1( ) to process gap sensor auto calibration
* Please refer Tools Menu Explanation (3-7) for more information.

> Contact the customer center if the printer does not execute gap sensor auto calibration mode function.

4-4 B/M Sensor Auto Calibration Mode

• Black mark sensor auto calibration mode is used when the printer does not detect a blackmark on the media correctly.

Generally a printer is set to detect most types of black mark but sometimes it fails to detect and keep feeding the media without a stop when special media used. In such case, use black mark sensor auto calibration mode function for a proper detection.

1) Make sure that media roll has been installed properly.

2) In print ready mode the setting menu and move to Sensor → Black Mark Cal(Black Mark Calibration) and press Function button 1( ) to process black mark sensor auto calibration

* Please refer Tools Menu Explanation (3-7) for more information.

> Contact the customer center if the printer does not execute black mark sensor auto calibration mode function.

4-5 RFID Auto Calibration Mode

• This process must be repeated each time a different RFID label type is used.

RFID coding does not work properly due to improper position setting of the RFID transponder (coding). In such case, use RFID auto calibration mode function for a proper detection.

1) Make sure that media roll has been installed properly.

2) In print ready mode the setting menu and move to RFID → RFID Cal(RFID Calibration) and press Function button 1( ) to process RFID auto calibration

* Please refer Tools Menu Explanation (3-7) for more information.

> Contact the customer center if the printer does not execute RFID auto calibration mode function.

4-6 Media Sensor Manual-Calibration

• Manual-calibration of media detection can be used when the printer cannot detect a media gap (or black mark) even after auto-calibration has been executed.

Users can calibrate sensor parameters in detail by using the BIXOLON Utility program provided by the manufacturer.

The BIXOLON Utility can be downloaded from the BIXOLON website.
(http://www.bixolon.com)

Users can calibrate printer to detect gap (or black mark) manually by using the BIXOLON Utility. For More information, please refer BIXOLON Utility manual.

Please make sure the printer is connected and execute the BIXOLON Utility program. Please the “Calibration Setting” Button after setting the interface type.

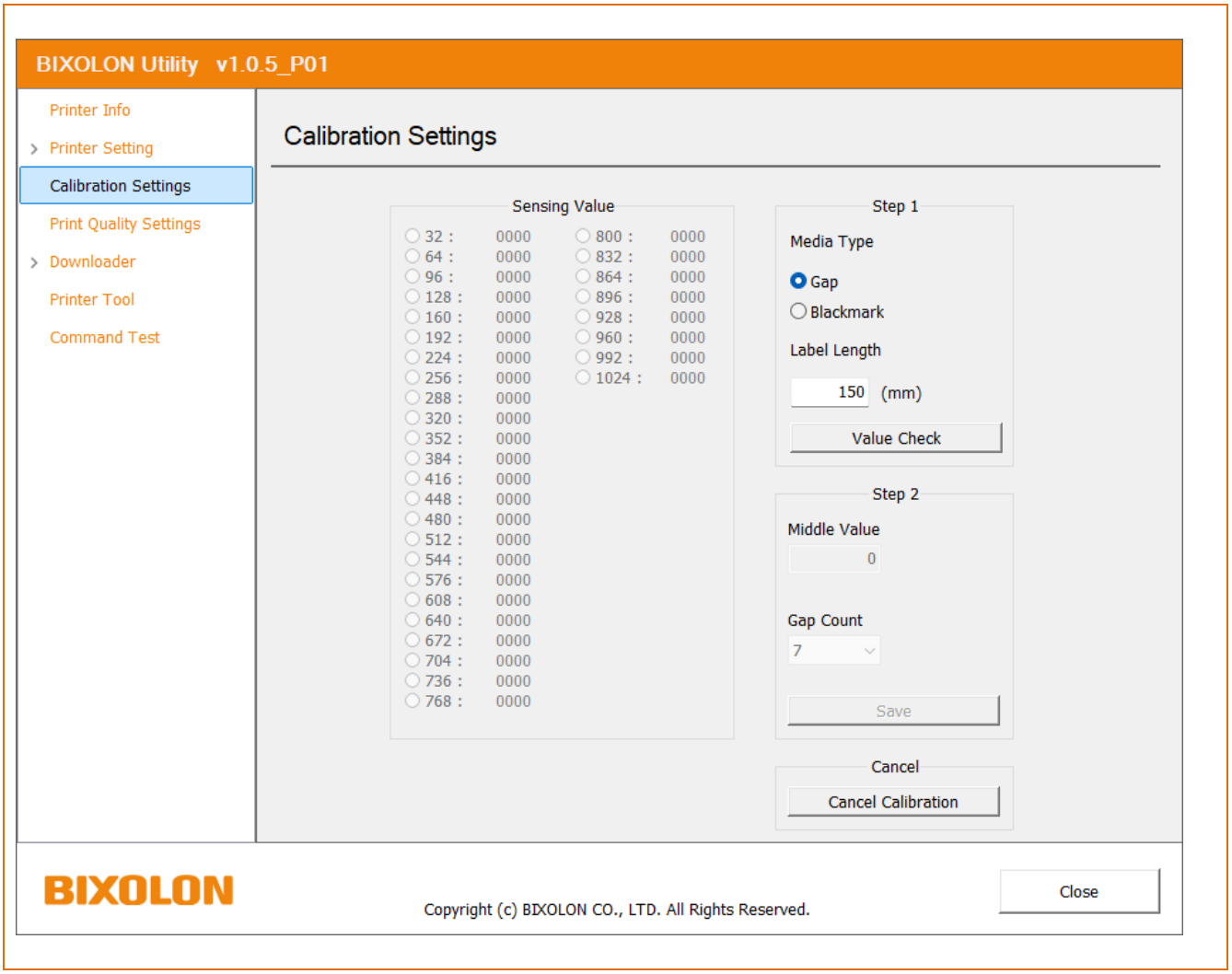

1) Select the sensing type and input the label length by millimeter and click “Check Sensing Value” button. Then printer starts calibration.

2) Once the calibration is done, scanned values will appear on the screen after calibration.

3) Optimal sensing values will appear in black bold letters on the left of the utility screen and select one of the values and click on “Save Calibration”

4) If chosen value does not work properly, please try the other values among the black bold letters.

5) To go back to the initial value, please click on “Cancel Calibration”

Contact the customer center if the printer does not enter media sensor manual-calibration mode.

4-7 Calculating the Position of RFID Transponder (coding)

• Use this function to calculate the optimum read/write position of transponder when RFID coding does not work properly due to improper position setting of the RFID transponder (coding).

Use the following utility program to calculate the RFID transponder (coding) position.

The installation files and manuals are provided on the BIXOLON official website. (http://www.bixolon.com)

Follow the procedure described below to calculate the RFID transponder position using the utility. Refer to the Utility Manual or RFID Program Manual for more details.

Launch the utility software while the printer is connected, configure the communication settings, and click the “Set Configuration” button in the RFID box.

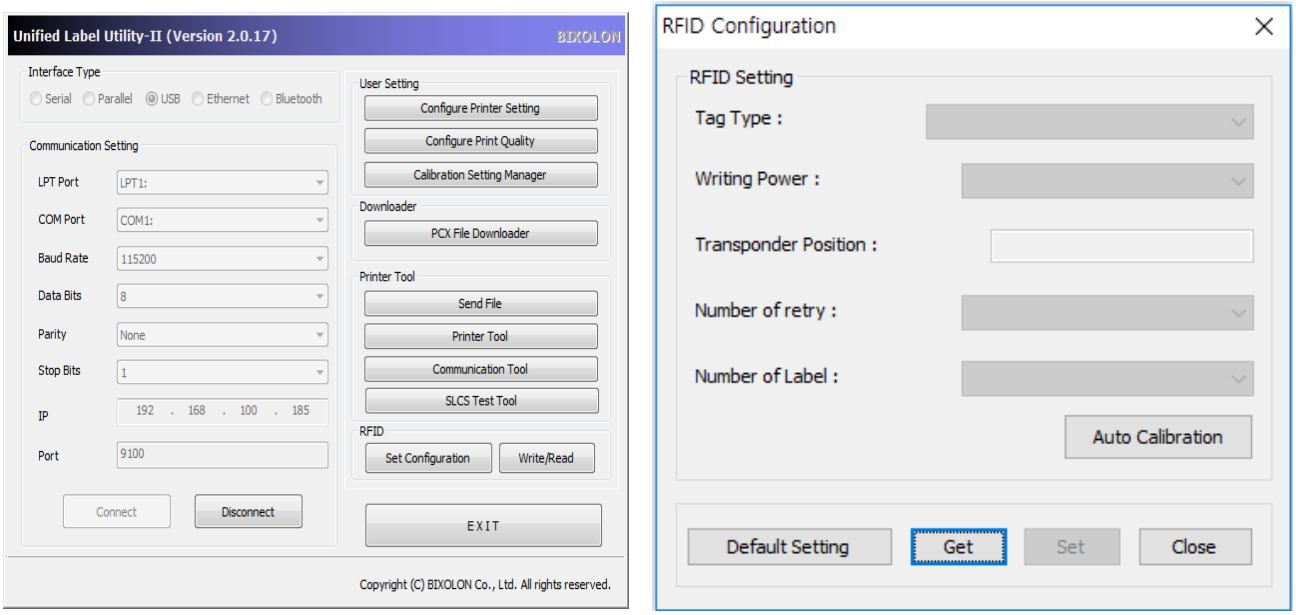

1) Press the “Get” button to print the RFID setting values currently saved in the printer.

2) Check the RFID setting values and press the “Auto calibration” button.
The printer calculates the RFID transponder position automatically.

3) Press the “Set” button to save the calculated RFID transponder position value to the printer.

RFID transponder position value may vary depending on the size of label and type of transponder.

4-8 Data Dump Mode

• This function can be used to diagnose the communication issues when the printer does not work properly.

In this mode, the received data are not analyzed and printed, instead they are dumped in hex format without processing.

Turn the printer off and on to recover to the print ready mode.

In print ready mode the setting menu and move to Tools → Dump → Dump Enable and press Function button 1( ) to run dump mode

* Please refer Tools Menu Explanation (3-7) for more information.

> Contact the customer center if the printer does not enter data dump mode.

4-9 Factory Reset

• This function is used to factory reset the printer settings.

1) Make sure that media roll has been installed properly.

2) In print ready mode the setting menu and move to Tools → Reset and press Function button 1( ) to reset the printer to Factory default.

* Please refer Tools Menu Explanation (3-7) for more information.

* The printer will be rebooted automatically.

> Contact the customer center if the printer does not enter factory reset function.

4-10 SWC (Simple Wi-Fi Connect)

• Connect the printer to a network using SWC(Simple Wi-Fi Connect) mode.
** blink rate of “Pulse” is slower than blink rate of “Flash”

• Make sure that media roll has been installed properly.

1) Enter SWC(Simple Wi-fi Connect) Mode using buttons. Print ready

   Interface → WLAN → SWC → Execute SWC and press Function 1 button( )

2) Printer’s LCD Display “SWC Mode” indicates that the printer is in SWC Mode.
   You can set network through Host Devices

   - LCD Display: ”Preparing...” → ”SWC Mode”

3) Once the network is not set correctly, LCD will Display Error Message,
   and try entering SWC Mode again.

   - LCD Display: ”Password Error Return to SWC mode”

4-11 Print Standby Mode

4-11-1 About Print Standby Mode

The printed area may become out of range of media if the media is not in the accurate printing position when the cover is opened and closed.
The printer is put into print standby mode instead of print ready mode when the cover is closed in order to prevent this problem, and it waits for additional user input.

The LCD status in the print standby mode can be as follows.
- LCD Display: STANDBY

The data received during print standby mode will be printed after the printer recovers to print-ready mode.

4-11-2 How to switch the printer from Standby Mode to Print Ready Mode

- Press “Function button 1( )” to switch to print ready mode without feeding any media.
- Press “Function button 2( )” to feed one page to align the media position and switch to the print ready mode.

Contact the customer center if the printer does not execute print standby mode function.

4-12 Media Installation Method of Peeler (Option) Model

• Use a peeler to separate the printed media from the liner automatically.
To use peeler, install media in the following ways:

1) Open the media cover.

2) Open the peeler cover.

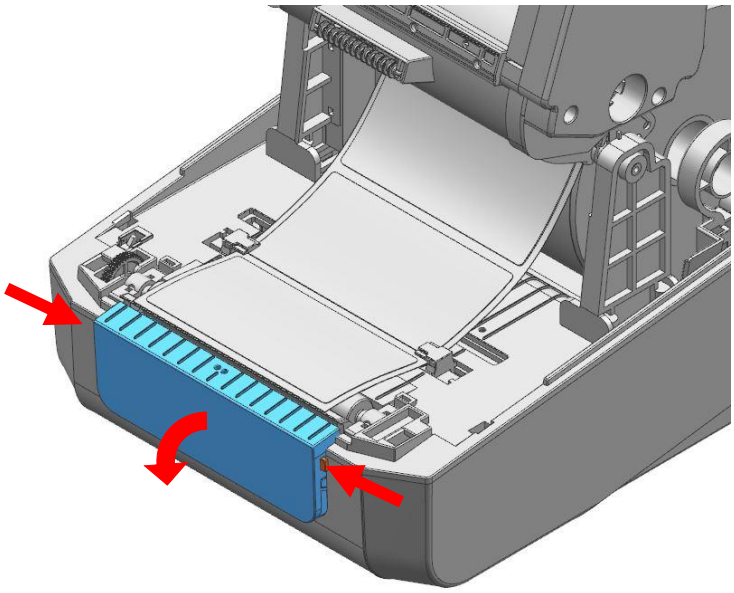

3) Set the peeler switch 'ON' position and check to LED has turned on.

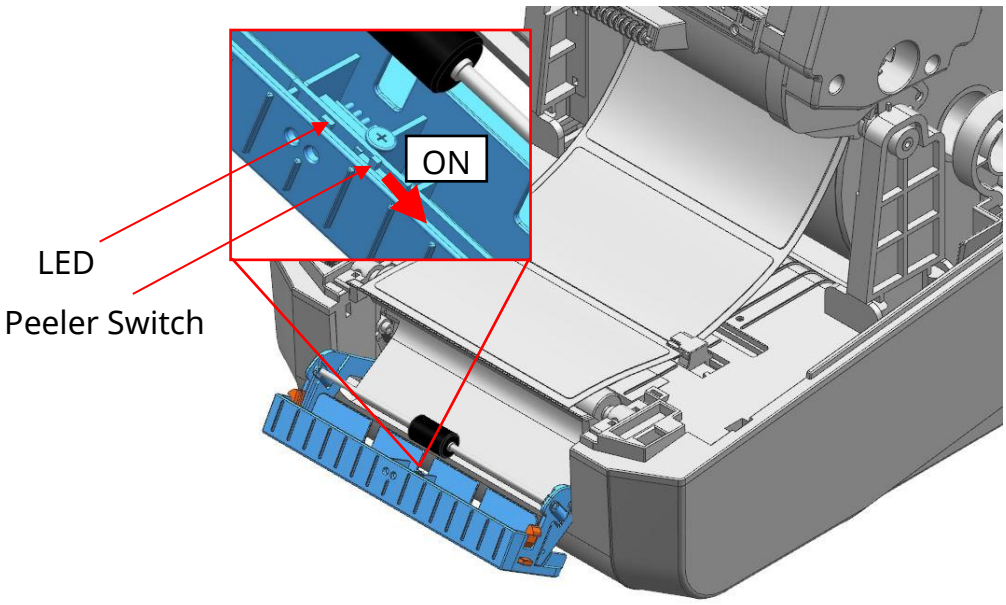

4) Remove the media and insert the media through the slot.

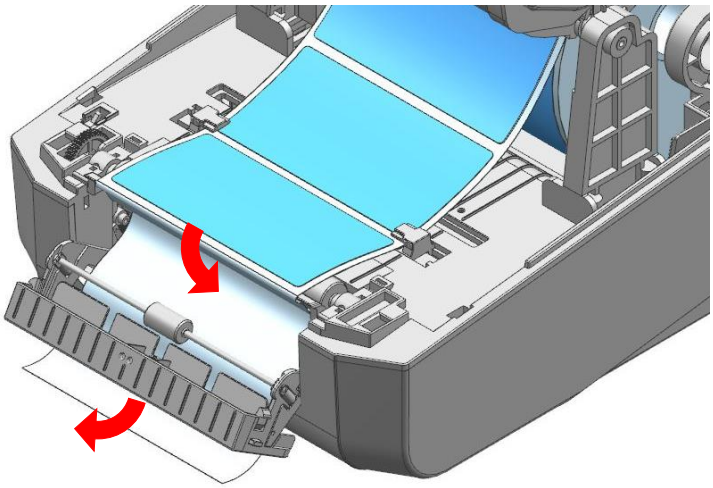

5) Close the peeler cover until a click sound is heard.

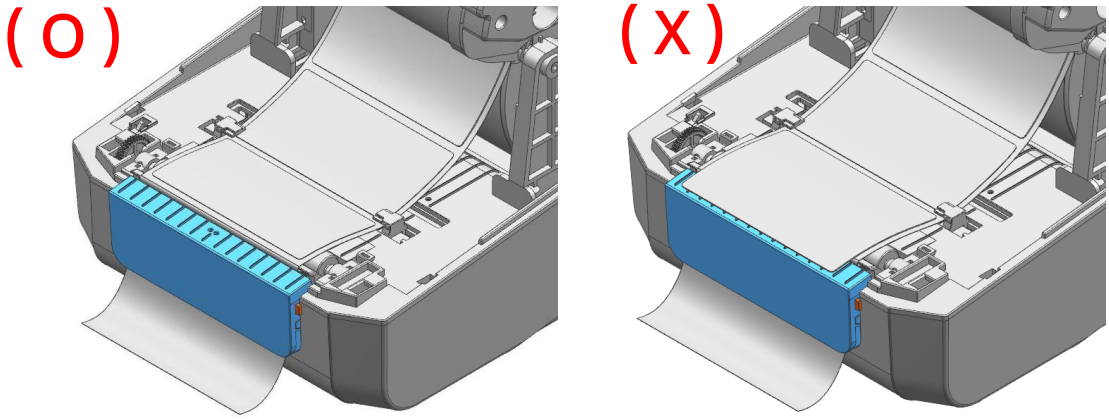

6) Close the ribbon assembly and media cover until a click sound is heard.

- When opening or closing the cover, be careful not to pinch your fingers.
- The peeler function is only available for Gap media.
- When the peeler is switched on, the next label will not be printed unless the printed label is removed from the peeler.
- When the peeler is switched off, the peeler does not work.
- The print head gets extremly hot while printing or after the printing, this can cause serious burns. Do not touch the print head.

4-13 Using Fan-Fold or External Media

4-13-1 When using Fan-Fold media

Supplying fan-fold media to the printer externally is done as follows.

1) Insert the media to at the rear of the printer as shown below.

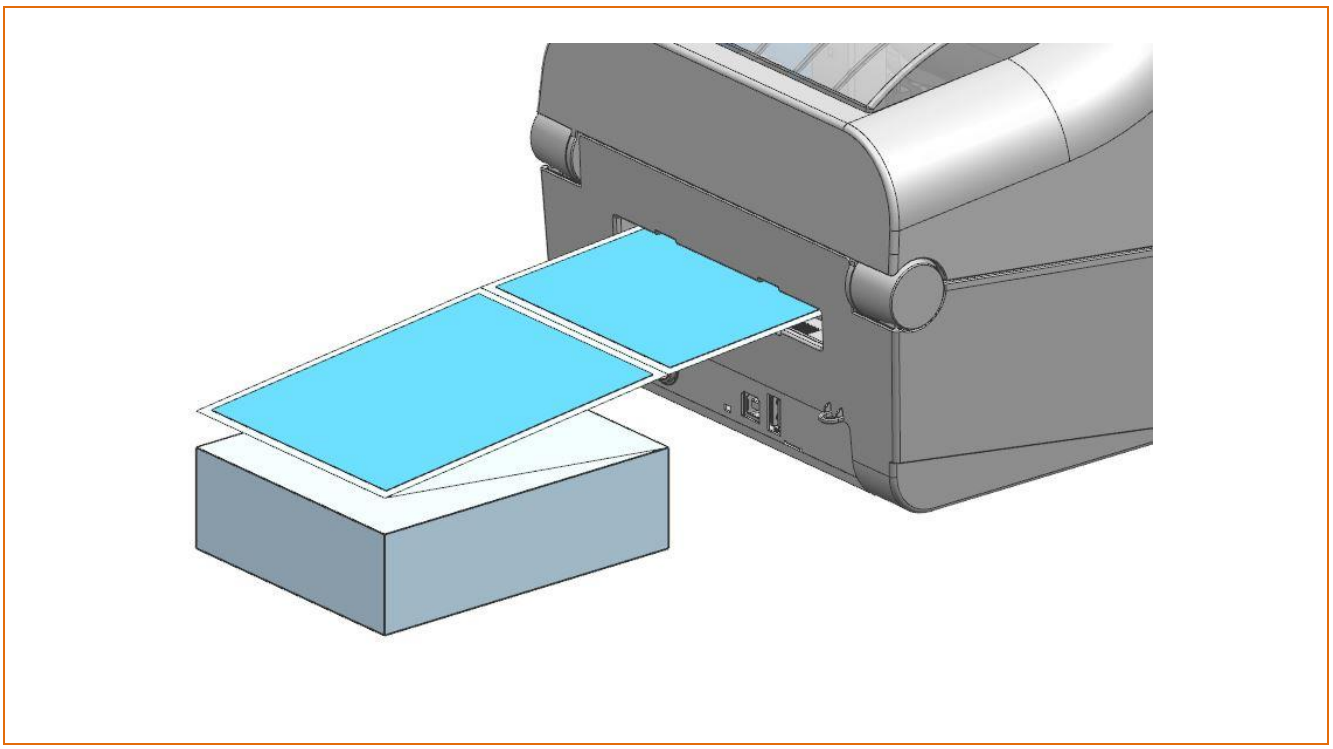

2) Adjust media holders to the media width by using the fix tool.

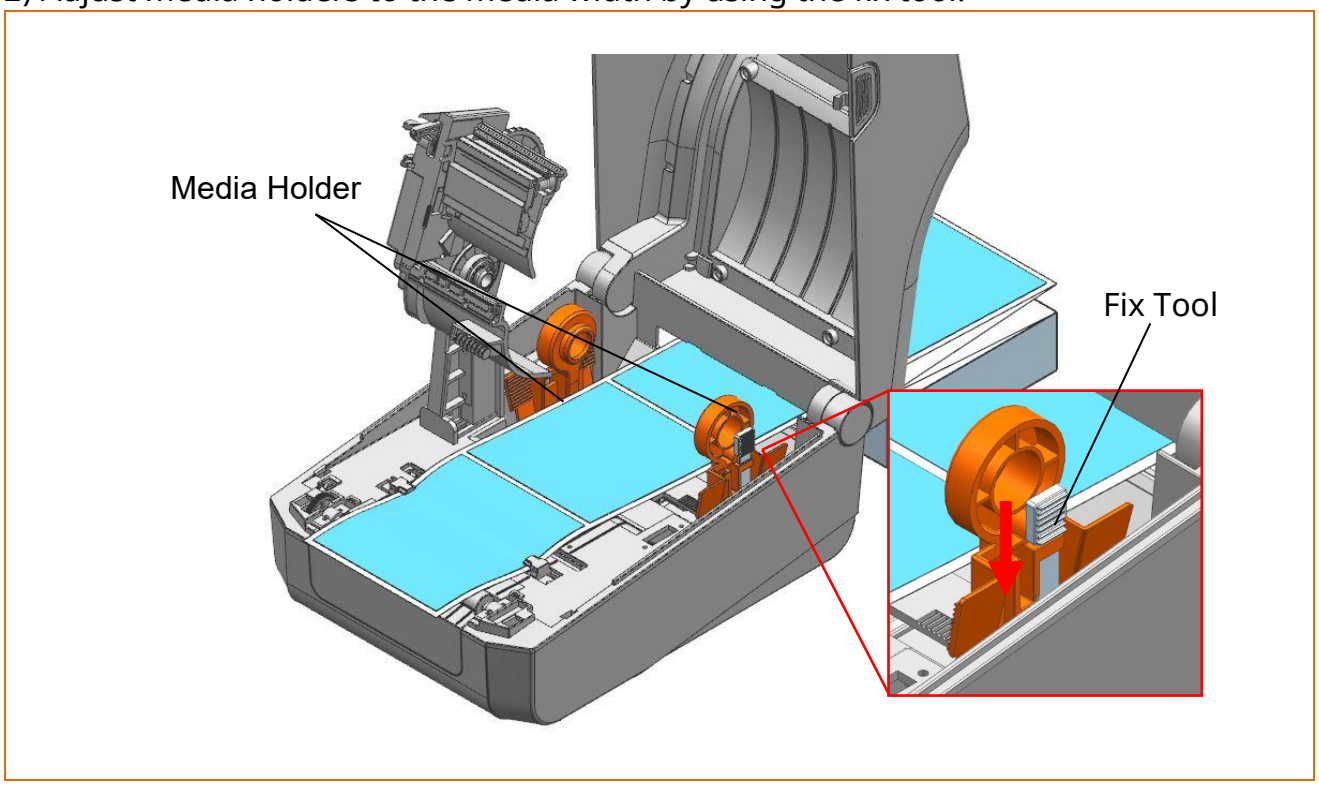

4-13-2 When using Large media roll (Optional)

Install the external media supplier(LES-400G) as shown below and adjust media holders to the media with Fix Tool.

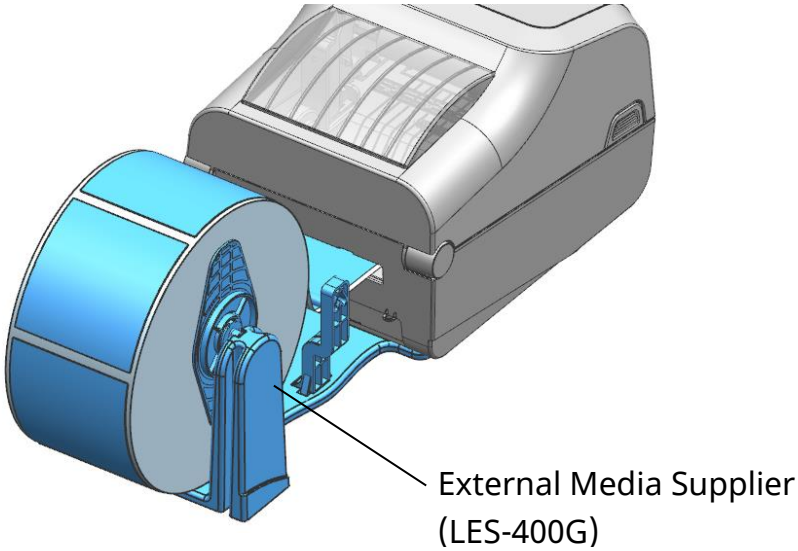

- Do not open the print cover while the printer is operating, otherwise the printer may be damaged.
- To prevent data loss, replace media only when the printer is not receiving any data.
- Be aware of physical damage caused by external media when operating the printer.

4-14 Auto Cutter (Optional)

• For auto media cutting, products equipped with auto cutter are available.

Auto-Cutter can be controlled by command or Unified Label Utility-II.

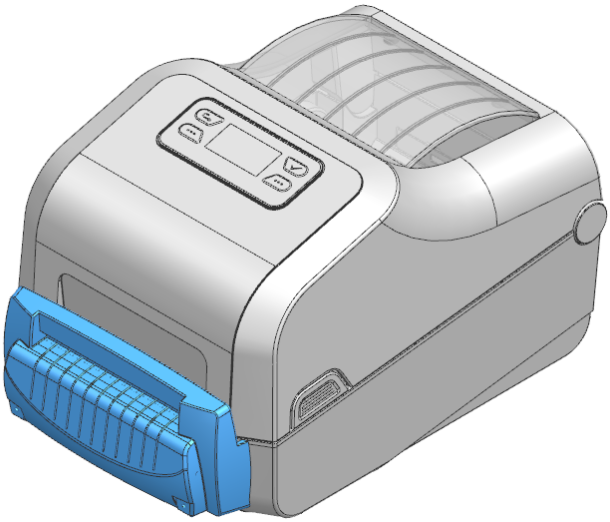

Please refer CUT(Auto-cutter Enable/Disable) of Programming (SLCS) Manual or Unified Label Utility-II Manual for more information.

- When opening or closing the cover, be careful not to pinch your fingers.
- Do not open the media cover while the printer is operating. The printer may be damaged.
- Change the media when the printer is not receiving data, or data may be lost.
- Never insert objects or fingers while performing the cutting function. This can cause serious bodily injury.
- Be careful not to touch the cutter blade with your hand. There may be a risk of personal injury.
- The print head gets extremly hot while printing or after the printing, this can cause serious burns. Do not touch the print head.

5. Printer Maintenance

Printing quality might be degraded by dust, foreign substance, adhesive substance, or other pollution materials stuck in the printer head or inside the printer.

When dirty, clean the print head as follows.

5-1 Cleaning Printer Head

• Be sure to turn the printer off.

1) Open the media cover and then remove adhesive foreign substances or other pollution materials with the cloth or cotton swab soaked in alcohol for medical.

2) After cleaning the head, do not use the printer until the alcohol used for cleaning evaporates completely. (1~2 min)

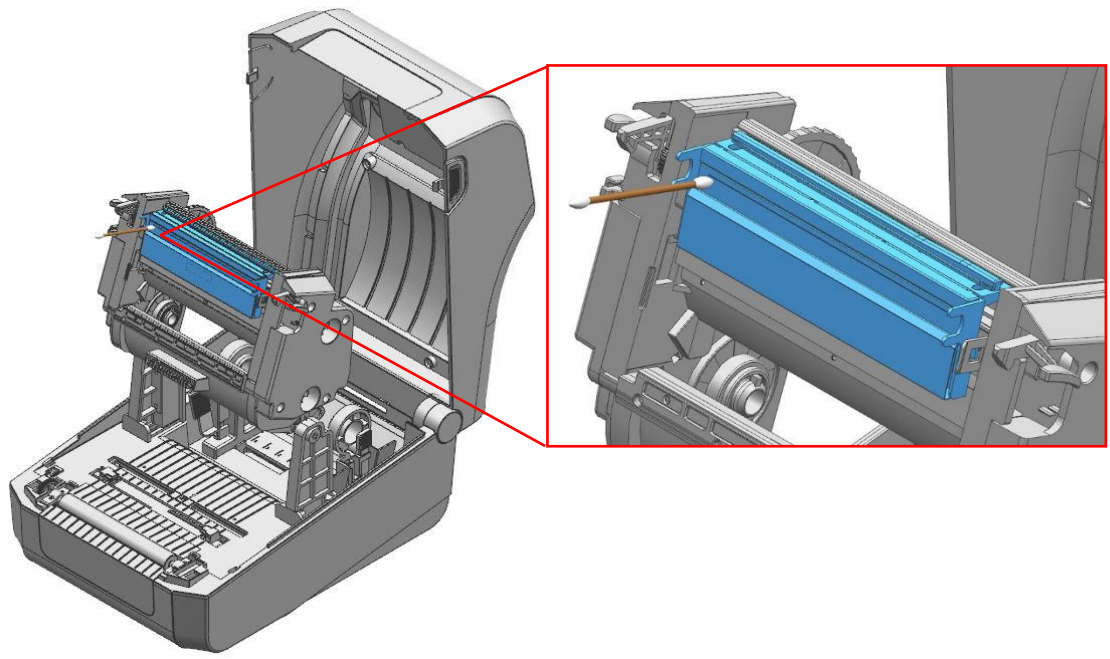

Perform the cleaning process each time the media roll is replaced to prevent print quality deterioration.

- Be sure to clean after turning the printer off.
- Be careful not to leave scratches in the print head.
  The printer may be damaged.
- The print head gets extremly hot while printing or after the printing, this can cause serious burns. Do not touch the print head.
- Do not touch heated area of print–head when cleaning.
  Personal injury may result from static electricity, etc.

5-2 Cleaning Sensors, Roller or/and media Path

• Be sure to turn the printer off.

1) Open the media cover and remove the media.

2) Remove any dust or foreign substance using dry cloth or cotton swab.

3) Soak the cloth or cotton swab in alcohol for medical use and use it to remove adhesive foreign substances or other pollution materials.

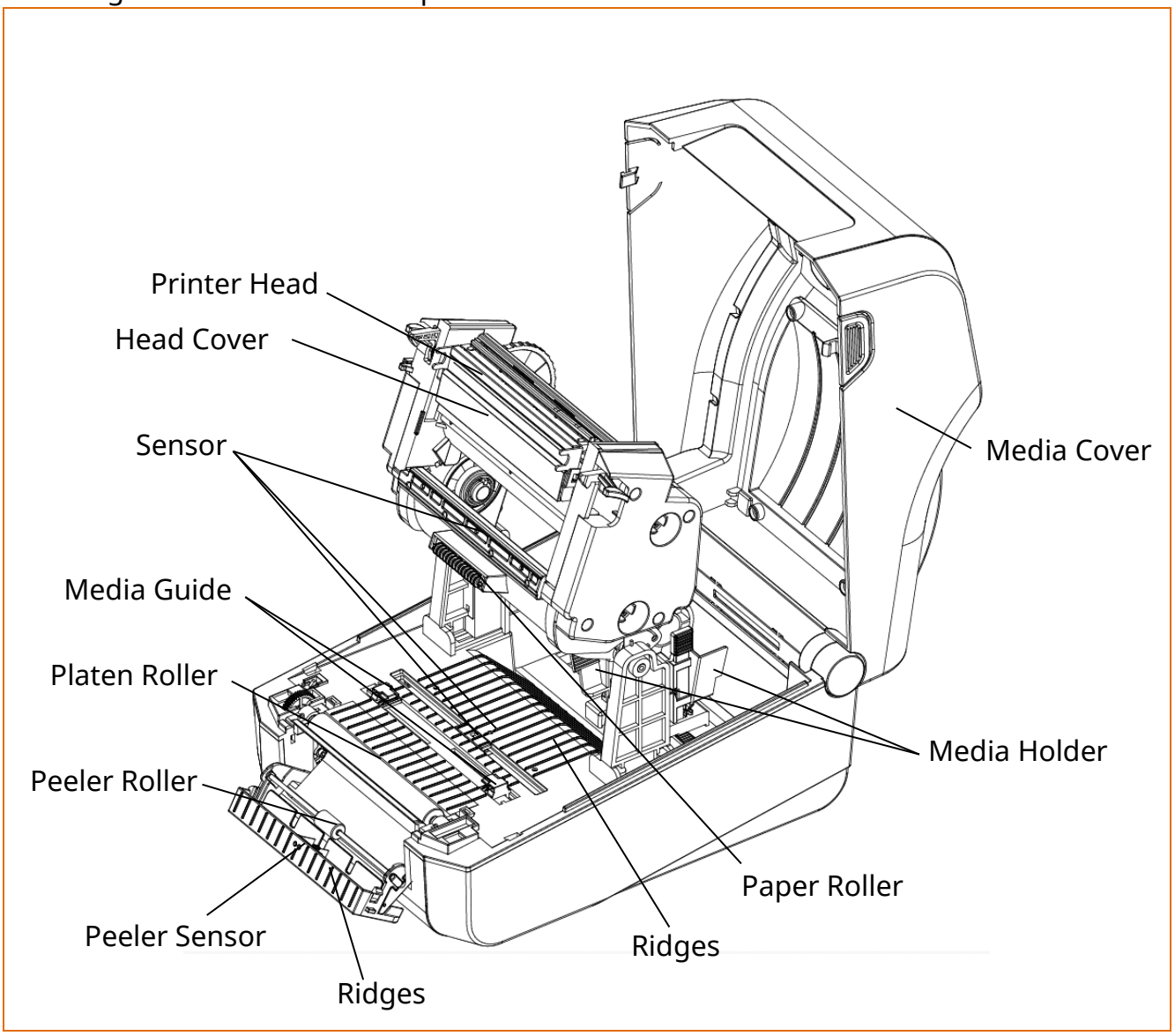

- Clean the parts when there is a degradation of performance in printing quality or media detection.
- After cleaning the parts, do not use the printer until the alcohol Evaporates completely (1~2 min) and the printer has completely dried.
- Be sure to use medical alcohol only. If not, it may cause printer damage.

5-3 Replacing Roller

• Be sure to turn the printer off.

1) Open the media cover and remove the media.

2) Pull the roller holders and separate the roller assembly.

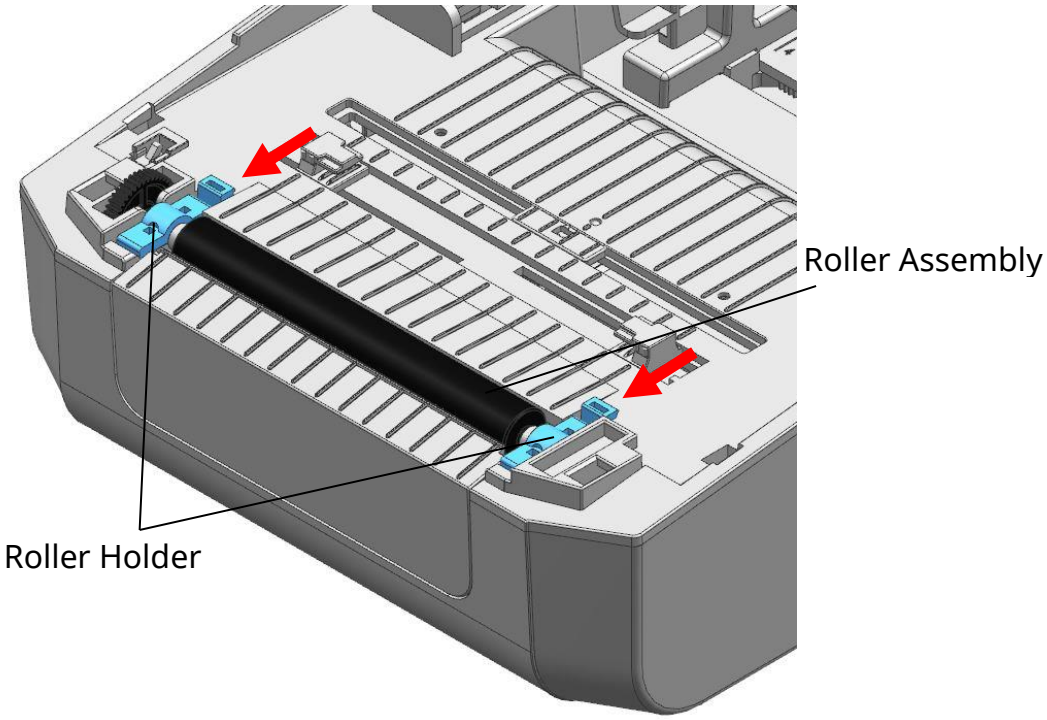

3) Assemble new roller assembly in reverse order.

- Make sure to turn the printer power off prior to cleaning.
- The print head gets extremly hot while printing or after the printing, this can cause serious burns. Do not touch the print head.

6. Specifications

6-1 Printer Specifications

Item		Description
Printer	Printing Method	Thermal Transfer / Direct Thermal Printing
	Dot Density	XD5-40IItR: 203 dpi (8 dot/mm) XD5-43IItR: 300 dpi (11.8 dot/mm)
	Printing Width	XD5-40IItR: Max. 108 mm (Max. 4.25 inch) XD5-43IItR: Max. 105.7 mm (Max. 4.16 inch)
	Printing Speed	XD5-40IItR: Max. 8ips(203 mm/sec) XD5-43IItR: Max. 6ips(152 mm/sec)
RFID	Frequency	Min. 860MHz ~ Max. 960MHz - KC(KOREA): 917MHz~923.5MHz - FCC(USA): 902MHz~928MHz - CE(EUROPE): 865MHz~868MHz
	Protocol	ISO 18000-6C / EPC Gen2
Media	Roll Width	15 ~ 118 mm (0.59 ~ 4.64 inch)
	Roll	Max. 127 mm (Max. 5 inch)
	Core	25.4 ~ 38.1 mm (1 ~ 1.5 inch)
Ribbon	Length / Width	Max 300m / 33 ~ 110mm(1.3 ~ 4.3 inch)
	Type(Outside)	Wax, Wax/Resin, Resin
	Core	12.7mm(0.5 inch) / 25.4mm(1 inch)
AC Adapter	SMPS Input Voltage	AC 100 ~ 240V
	Frequency	50/60 Hz
	SMPS Output Voltage / Current	DC 24V ±5% / 2.5A
Usage Conditions	Temperature	0 ~ 40 ℃ (Operating) -20 ~ 60 ℃ (Storage)
	Humidity (except for media)	10 ~ 80 % RH (Operating) 10 ~ 90 % RH (Storage)

Print speed may vary depending on the data transfer speed and the combination of command.

- In case of danger, turn off the power to cut the connection.
- The power cord must be grounded to ensure safety and reduce electromagnetic interference.

6-2 Label Types Specifications

• The label types used with this printer are as follows.

- Control Labels: PET
- Other Labels: PET

Revision History

Ver.	Date	Description
1.00	10-11-2025	New