BIXOLON

User's Manual

GPIO Interface

XT5-40 Series

Ver. 1.01

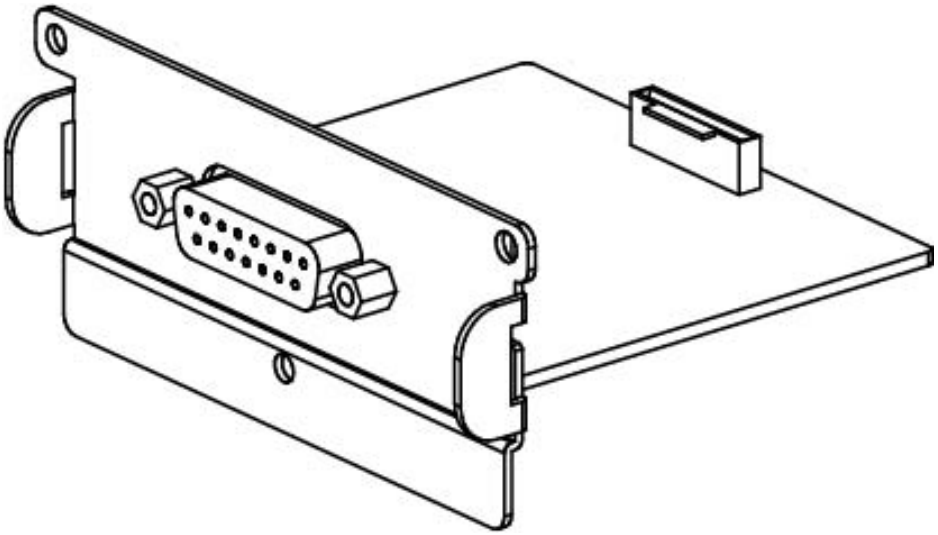

http://www.bixolon.com

Table of Contents

Copyright **3**
Manual Introduction **4**
Product Introduction **5**

1. Content Confirmation **6**
2. Installation & Usage **7**
2-1 GPIO Interface Installation 7
2-2 GPIO Interface Specifications 11
2-3 GPIO Interface Jumper Composition 12
2-4 GPIO Interface Pin Composition 13
2-5 GPIO Interface Signal 15
3. GPIO Setting **17**
3-1 GPIO Menu Composition 17
3-2 GPIO Menu Description 18
4. GPIO Control Commands **20**
4-1 ^gt 21
4-2 ^gv 22

Copyright

BIXOLON maintains ongoing efforts to enhance and upgrade the functions and quality of all our products.
In the following, product specifications and/or user manual content may be changed without prior notice.

Caution

Electronics, such as printers, are prone to damage by static electricity. Therefore, to protect the printer from static electricity, be sure to turn off the printer before connecting or disconnecting the cable to the rear of the printer. If the printer is damaged by static electricity, contact your local dealer.

This equipment is not suitable for use in locations where children are likely to be present. When the printer is operating with the media cover open, do not wear anything that can touch the drive, such as clothing, necklaces, rings, watches, or employee certificates close to it. Also, keep yourself away from the printer as it is dangerous for some parts of the body to come into contact with it. If an object or part of your body touches the drive, immediately disconnect the power cord or turn off the power switch on the back of the product.

If the battery is not replaced correctly, there is a risk of explosion. Replace only with the same model or equivalent product specified by the manufacturer. When the battery is used up, be sure to tape the terminals and insulate them and dispose at the designated place in accordance with the relevant laws and ordinances set by the state.

Manual Introduction

This manual provides basic information about the GPIO interface and explains how to install, use, and check it.
provide. Please read this manual thoroughly before using the product in order to protect the user's safety and prevent property damage.

Symbol Introduction

	Precaution & Warning	It describes death, physical injuries, serious financial losses, and damage to data etc. that can be caused to the user.
	Note	It provides additional information on the function and performance of the product.

Product Introduction

This user manual describes how to install the GPIO interface and use the product.

The GPIO interface is connected to the external device PLC through a standard DB15 connector, and the input/output signal is connected to the external device PLC.
Through this, you can check.

1. Content Confirmation

The following items should all be contained in the GPIO Interface package.
Contact the dealer from which the purchase was made if any item is damaged and/or missing.

Product

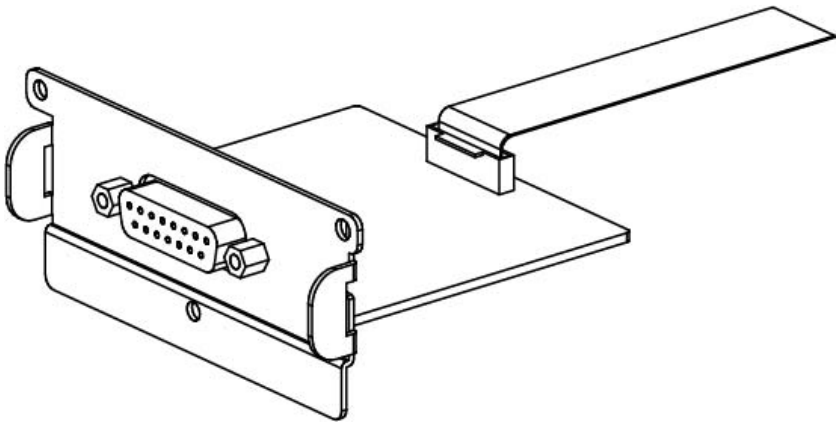

GPIO Interface

Basic Components

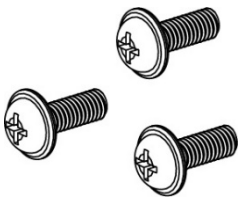

Screw 3ea

User Manual

2. Installation & Usage

2-1 GPIO Interface Installation

• Install GPIO Interface in the following ways:

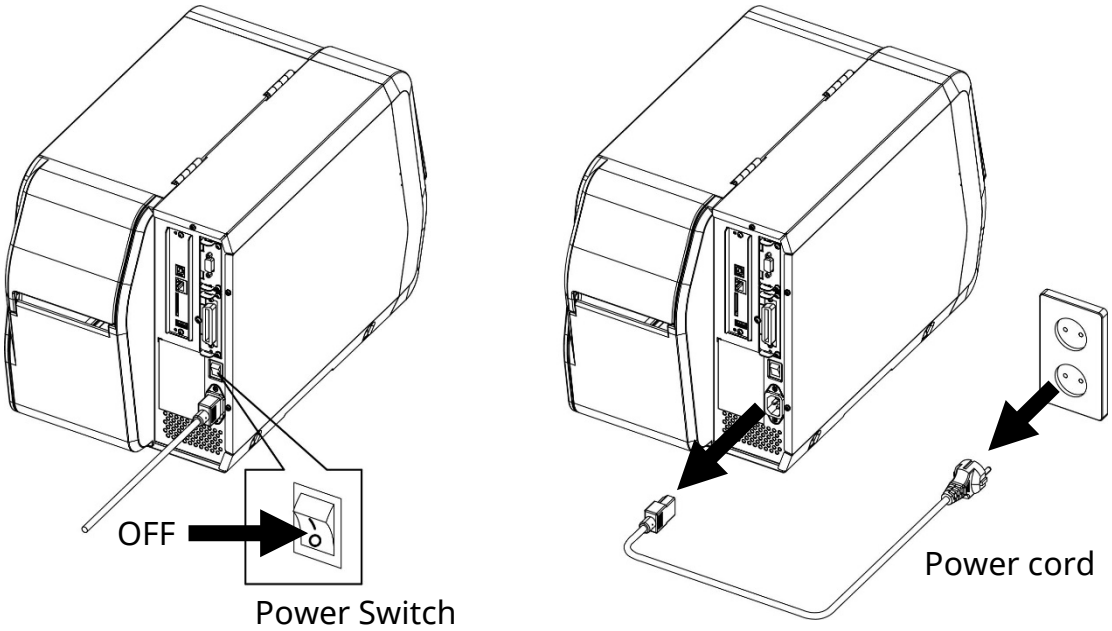

1) Turn off the printer power switch.
2) Unplug the power cord from the wall outlet.
3) Remove the power cord from the printer.

- For the safety of people and equipment, please use the appropriate power cord for your country or region.
- Be sure to turn off the printer before connecting the power cord to the printer. This can cause serious electrical damage and bodily injury.
- Do not operate the printer and power supply in a humid environment. This can cause serious electrical damage and bodily injury.
- Do not connect an input voltage beyond the specifications of the power supply. This may result in product damage and fire.

4) Open the media cover. Remove 6 screws to remove the main cover.

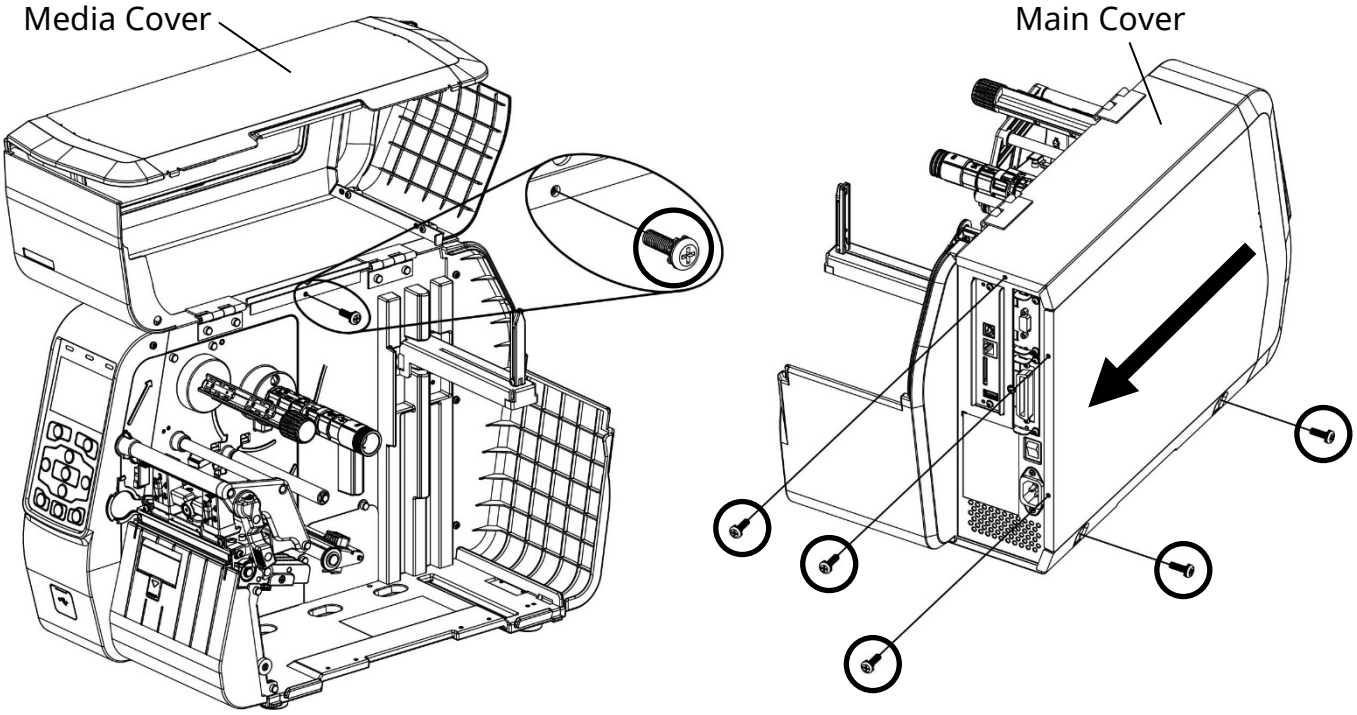

If there is a parallel (IEEE1284) interface, remove the FFC cable from the main board.

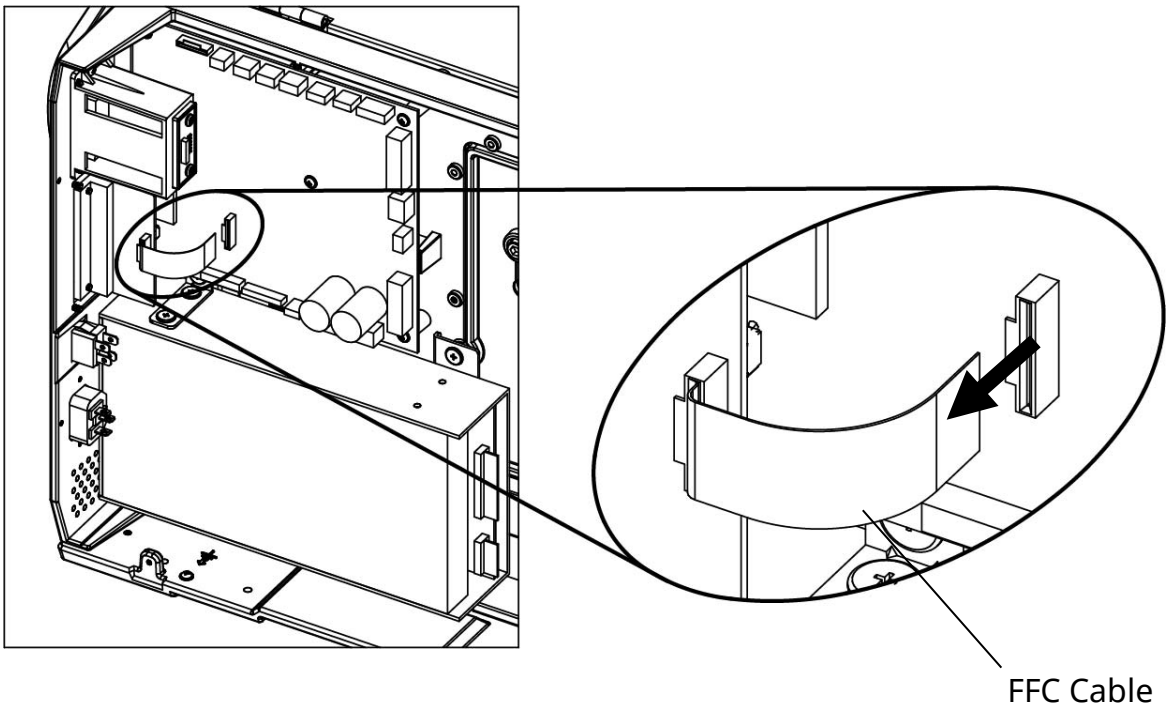

5) Remove 3 screws to remove the parallel (IEEE1284) interface or parallel cover from the printer.

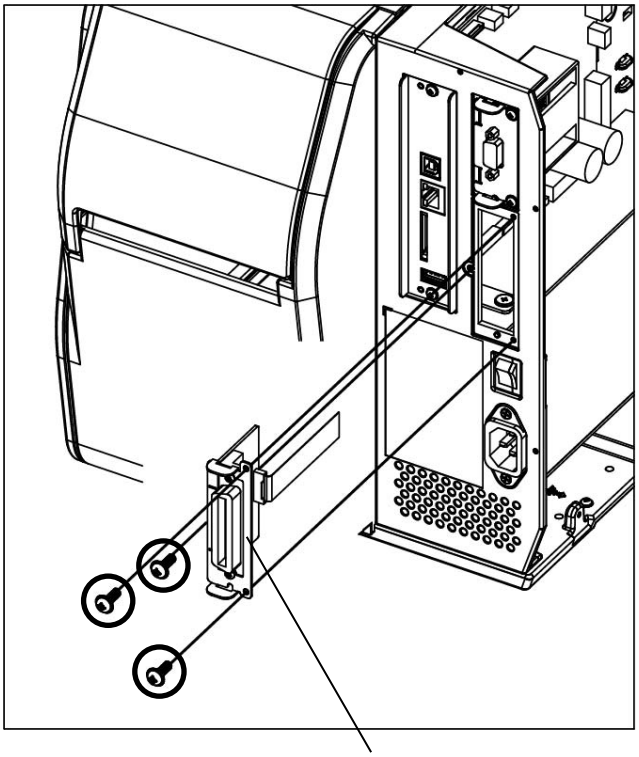

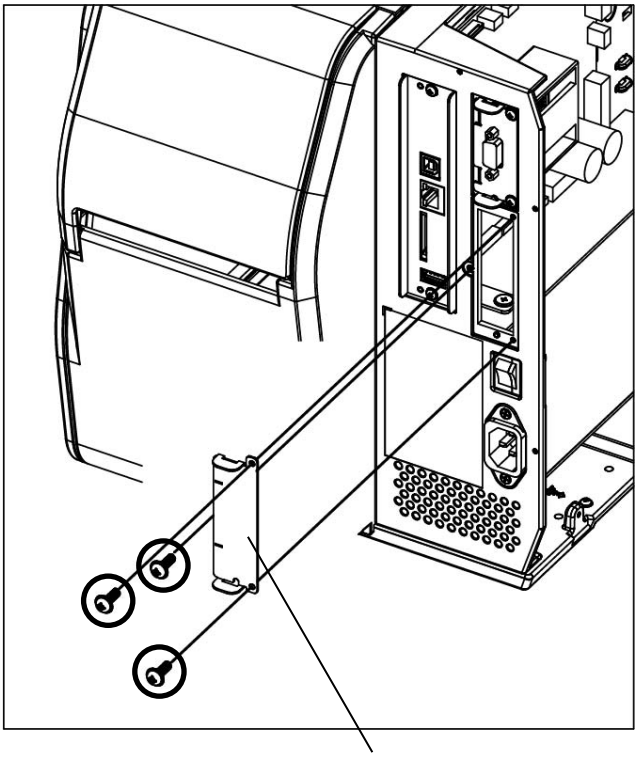

6) Insert the GPIO interface into the slot and tighten the 3 screws.

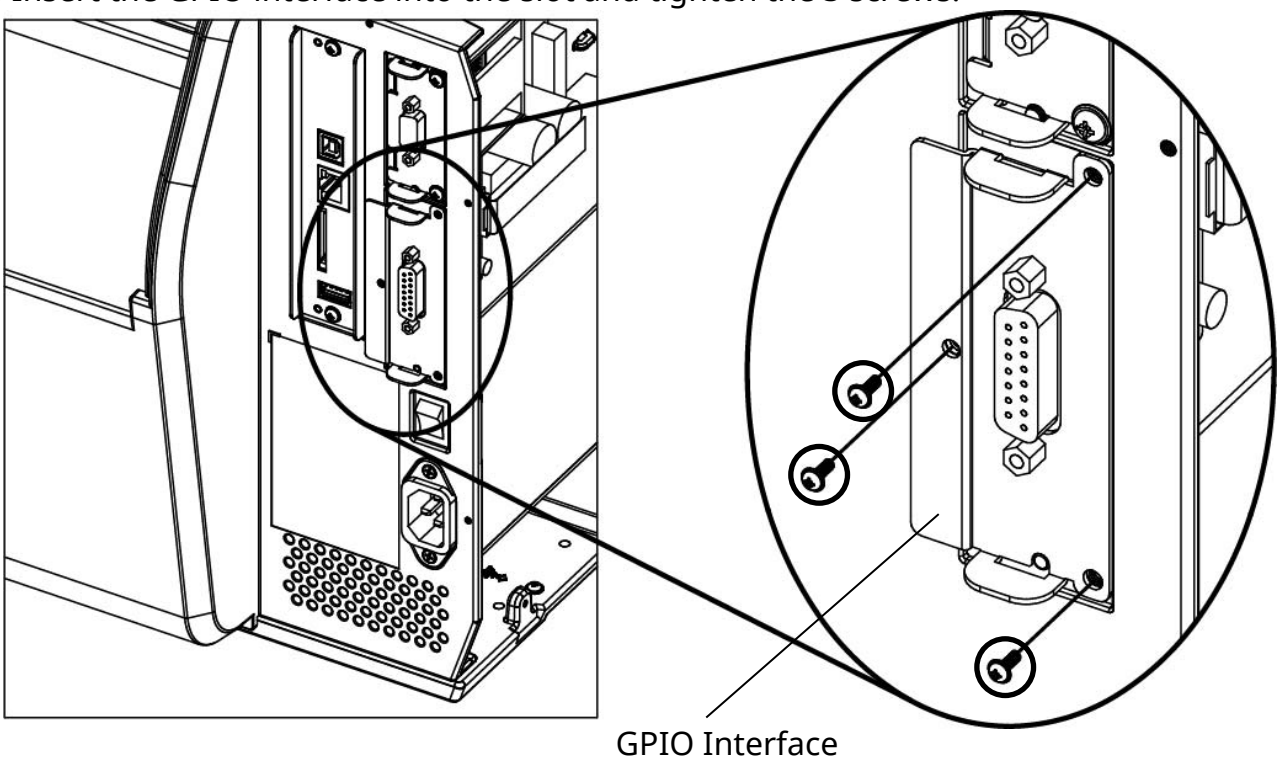

7) Securely insert the FFC cable under the guide interface and connect it into the main board connector. (Do not connecting the GPIO FFC cable at the connector of the Parallel (IEEE1284).)

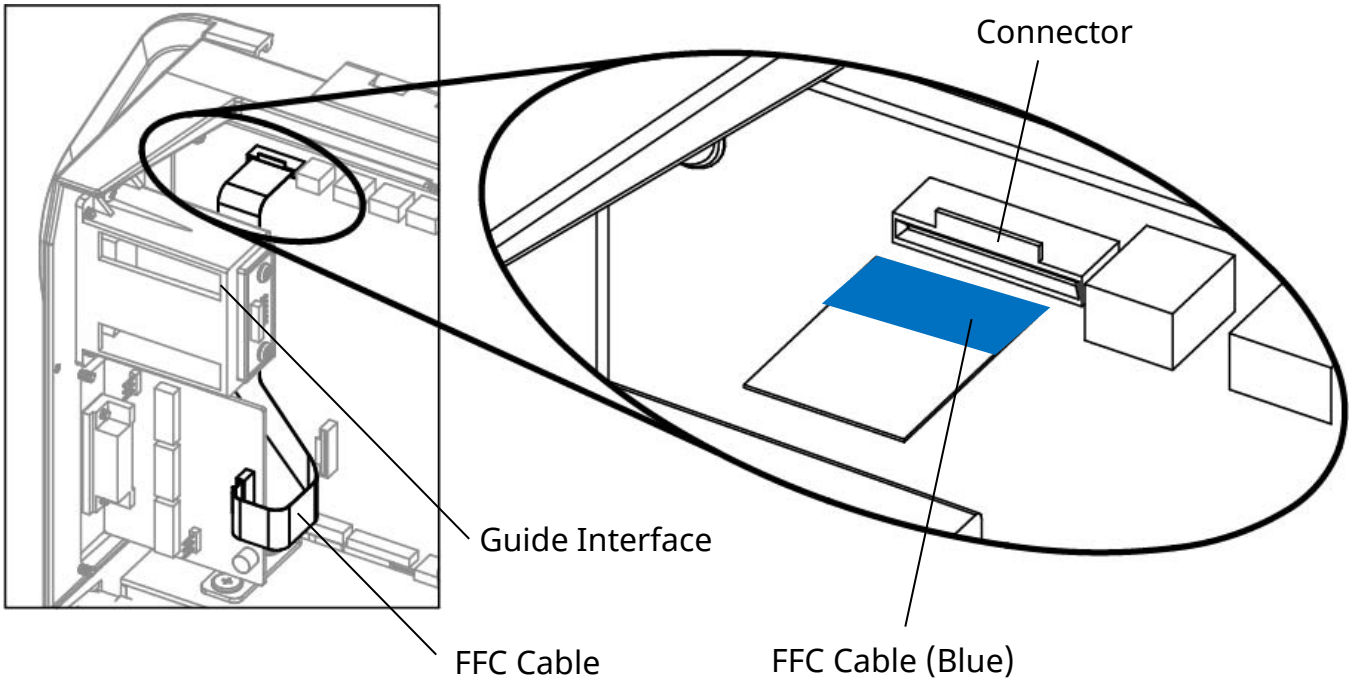

When connecting the FFC cable, make sure that the blue side faces the connector.

- Failure to connect the FFC cable correctly may result in serious electrical damage, injury or fire.
- Be careful of FFC cable warping, it may damage the cable.

8) Assemble the main cover removed in Step 4.

2-2 GPIO Interface Specifications

• GPIO Interface Specification in the following ways:

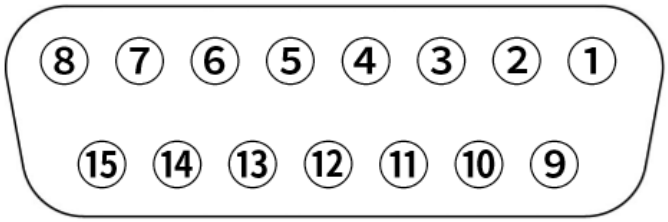

Parts	Specifications	
Connector	DB15 (female)	
Output Voltage	5V ± 10%, 1.0A (Not Isolated)	2, 7 pin
	24V ± 10%, 0.4A (Not Isolated)	2, 7 pin
	GND / GND_ISO (Isolated Ground)	1, 8 pin
Pull-up resistor	Output (10K ± 5%)	
	Input (4.7K ± 5%)	
GPI	START PRINT	3 pin
	FEED	4 pin
	PAUSE	5 pin
	REPRINT	6 pin
GPO	ALERT	10 pin
	ENE PRINT	11 pin
	MEDIA OUT	12 pin
	RIBBON OUT	13 pin
	PRINT READY	14 pin
	RFID VOID	15 pin
	RESERVED	9 pin

2-3 GPIO Interface Jumper Composition

• Jumper settings and instructions for the GPIO Interface are as follows:

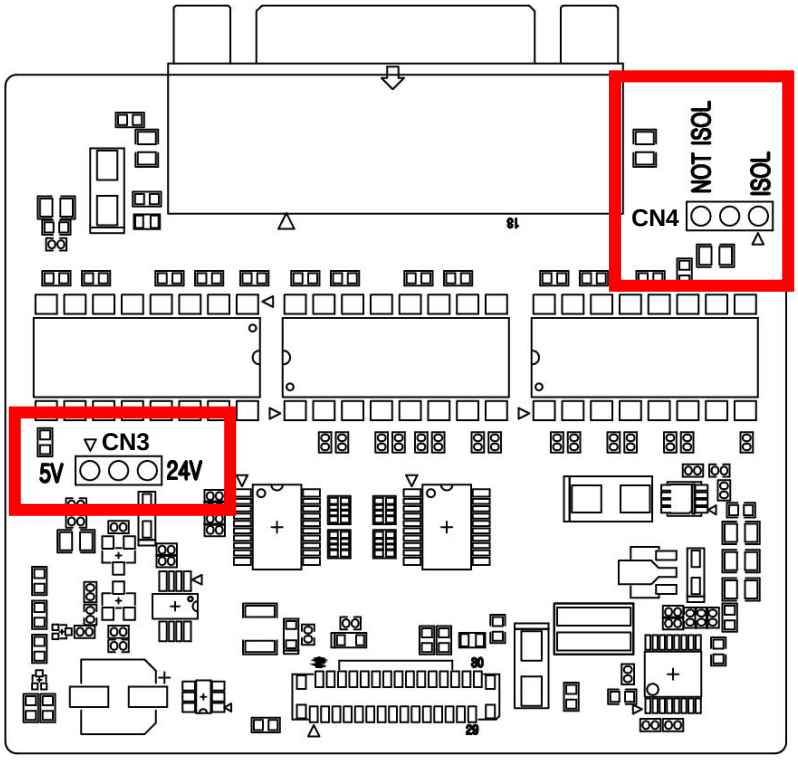

GROUND	CN4 (GND Jumper)	CN3 (Voltage Jumper)	Description
Isolated Ground		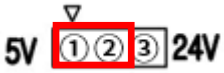	Connect Pins #1 and #2 with Jumper.
		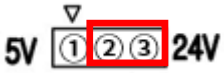	Connect Pins #2 and #3 with Jumper(default).
Not Isolated Ground		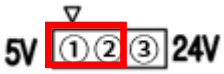	Connect Pins #1 and #2 with Pin Jumper * Output Voltage: 0V, 5V
		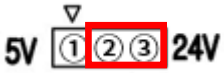	Connect Pins #2 and #3 with Jumper * Output Voltage: 0V, 24V

Set the command (^gv) for Not isolated Ground.

Turn off the printer while changing the GPIO Interface Jumper settings for your safety.

2-4 GPIO Interface Pin Composition

• Pin layout and settings of the GPIO Interface are as follows:

Pin	Signal Name	Signal Type	Description
1,8	**GND**	**Ground**	Use the CN4 jumper to set the ground. (Isolated GND or Not Isolated GND) ❗ Refer to “2-3 GPIO Interface Jumper Settings" for details.
2,7	**POWER**	**Power**	Use the CN3 jumper and voltage command to set the voltage. ❗ Refer to "2-3 GPIO Interface Jumper Settings" for detail. ❗ Refer to “4-2 ^gv” for the voltage setting command.
3	**START PRINT**	**Input**	Used as a signal to "Start Print" for the GPIO interface. *Pulse Mode: starts printing when the signal changes from HIGH to LOW *Level Mode: starts printing when the signal is input as LOW (The above mode can be set through the command or LCD.) ❗ Refer to "2-5 GPIO Interface Signal" for more information about the operation. ※ The input signal should be maintained in LOW for 40ms.
4	**FEED**	**Input**	Feeds one sheet of media to go into the standby mode. * Feed Media: feed when the signal is LOW * Feed End: go into the standby mode when the signal is HIGH ※ The input signal should be maintained in LOW for 40ms.
5	**PAUSE**	**Input**	Pauses the printing process or goes into standby mode without feeding media. Enabled when the signal changes from HIGH to LOW. * Goes into Pause mode during printing or standby mode. * Goes into Standby mode during pause mode. ※ The input signal should be maintained in LOW for 40ms.

6	**REPRINT**	**Input**	Can be used when the reprint function is active (Active Low/Active High) in the GPIO interface. * Disable: disable reprint function * Active Low: reprint when the signal changes from HIGH to LOW * Active High: reprint when the signal changes from LOW to HIGH ※ The input signal should be maintained for 40ms (LOW / HIGH).
9	**RESERVED**	-	-
10	**ALERT**	**Output**	Check the status of the printer. The LOW outputs in the following cases: * Printer cover opens * Without ribbon or media * Printer paused * Error on operation
11	**END PRINT**	**Output**	Used for "End Print" signal for the GPIO interface port. The GPIO port modes (Mode1 to 4) should be enabled. * Off: GPIO disabled (print without the start signal) * Mode1: LOW while printing or feeding, otherwise HIGH * Mode2: HIGH while printing or feeding, otherwise LOW * Mode3: remains LOW for 40ms after printing, otherwise HIGH * Mode4: remains HIGH for 40ms after printing, otherwise LOW Refer to "2-5 GPIO Interface Signal" for more information about operation.
12	**MEDIA OUT**	**Output**	The printer has no media. *No Media: Signal LOW
13	**RIBBON OUT**	**Output**	The printer has no ribbon. *No Ribbon: Signal LOW
14	**PRINT READY**	**Output**	Indicates whether the Printer is ready for printing. * When Printing is Ready: Signal LOW Refer to "2-5 GPIO Interface Signal" for more information about operation.
15	**RFID VOID**	**Output**	Indicates whether the printer fails to read or write the RFID Tag. *Failed to Read or Write RFID Tag: remains LOW for 40ms after fail, otherwise HIGH

2-5 GPIO Interface Signal

• The printer has the following signals according to the GPIO port mode settings:

1) Printer Operation Signal (Port Mode1)

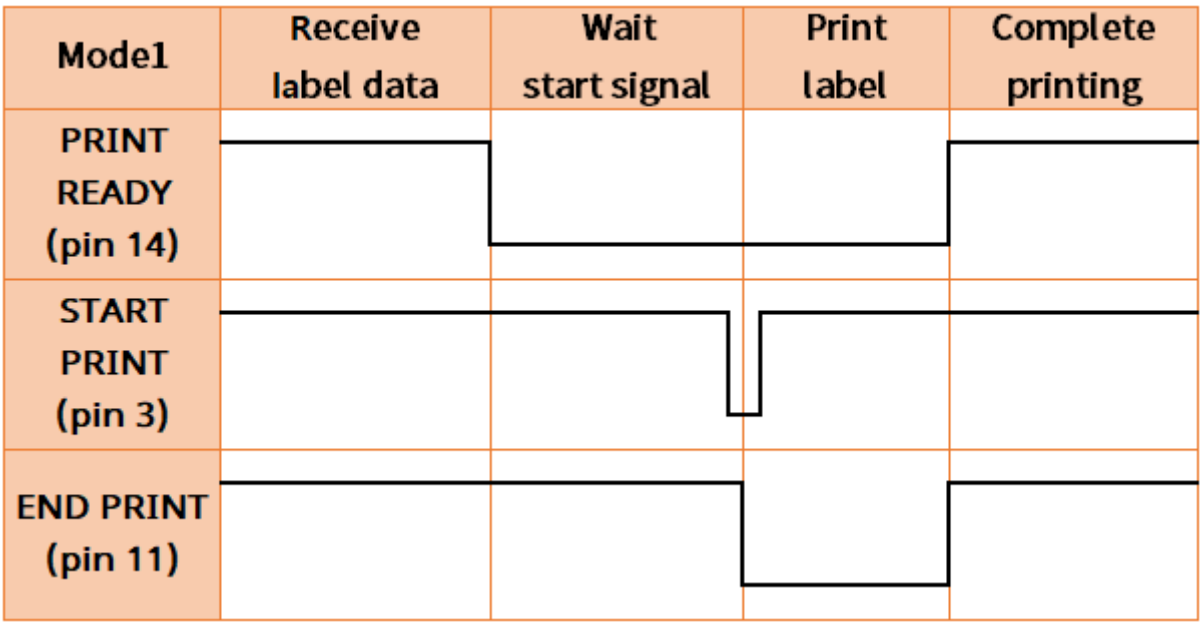

2) Printer Operation Signal (Port Mode2)

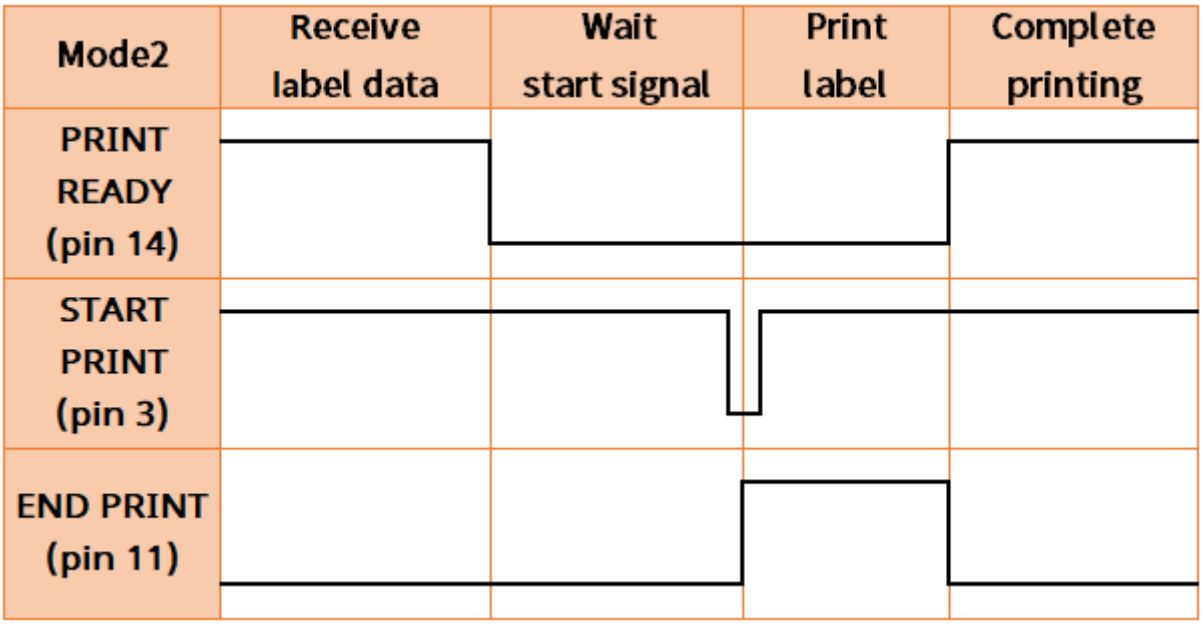

3) Printer Operation Signal (Port Mode3)

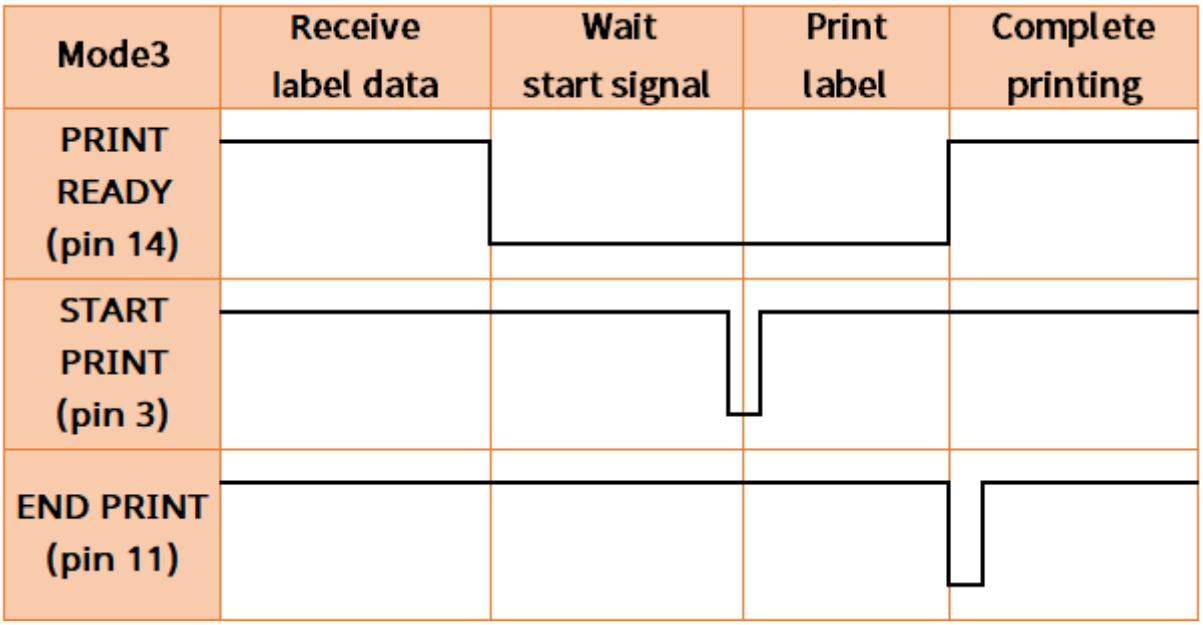

4) Printer Operation Signal (Port Mode4)

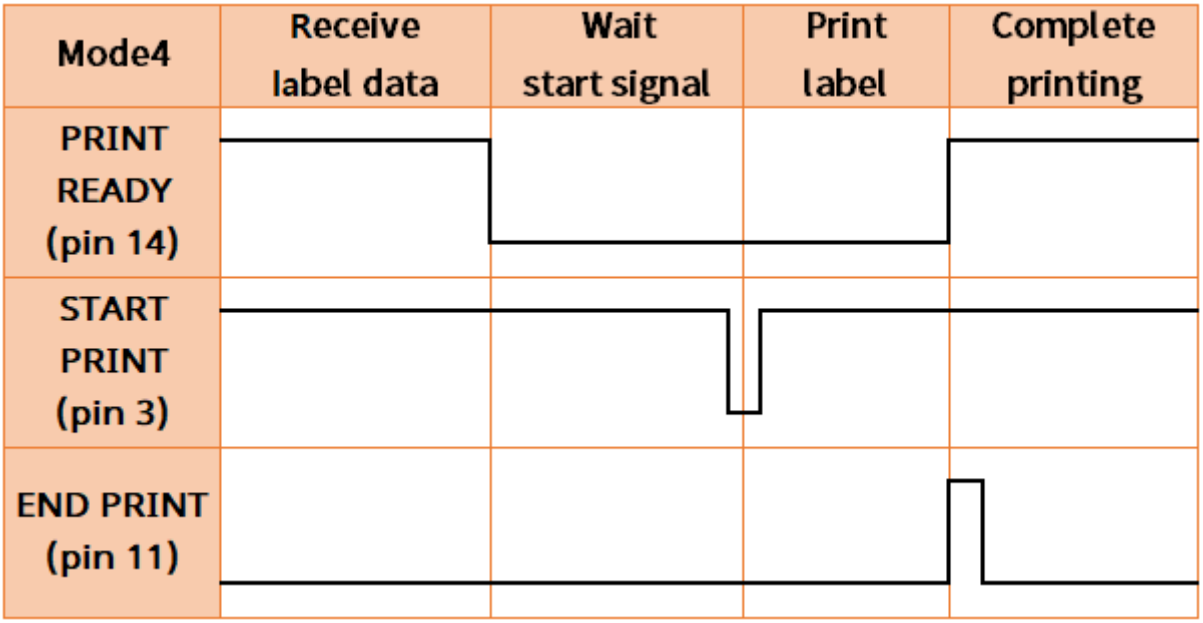

3. GPIO Setting

3-1 GPIO Menu Composition

	Description	
Setting	Print Width	
	Print Length	
	Print Direction	
	Print Speed	
	Print Density	
	Print Method	
	Media Type	
	Tear Off	
	Print Offset	
	Left Position	
	Print Mode	
	Power Up Action	
	Print Head Close	
	GPIO	GPIO Port Mode
		Start Print Mode
		Error on Pause
		Reprint
		Voltage Info.

3-2 GPIO Menu Description

List	Description
GPIO Port Mode	Set the “END PRINT” signal for the GPIO port. **Default Value** Off **Variable Value** Off: GPIO disabled (printing without the start signal) 1: In general, the end print signal is HIGH and becomes LOW when printing/feeding. 2: In general, the end print signal is LOW and becomes HIGH when printing/feeding. 3: In general, the end print signal is HIGH and becomes LOW for 40ms after printing. 4: In general, the end print signal is LOW and becomes HIGH for 40ms after printing. **Command** ^gt
Start Print Mode	Set the “START PRINT” signal for the GPIO port. **Default Value** Level Mode **Variable Value** Pulse Mode: starts printing when the signal changes from HIGH to LOW Level Mode: starts printing when the LOW signal is input **Command** ^gt

Error on Pause	Add Pause to the "ALERT" signal for the GPIO port. **Default Value** Enable **Variable Value** Enable, Disable **Command** ^gt
Reprint	Set the “REPRINT” signal type for the GPIO port. **Default Value** Disable **Variable Value** Disable, Active Low, Active High **Command** ^gt
Voltage Info.	Check the ground status and output voltage. **Command** ^gv

4. GPIO Control Commands

List of GPIO control commands

1) ^gt
   GPIO function setting or report setting data to host.

2) ^gv
   GPIO voltage setting or report setting data to host.
   *Restart the printer after setting the GPIO voltage.

4-1 ^gt

1) Descriptions

GPIO function setting or report setting data to host.

2) Syntax

^gt*p1,p2,p3,p4 ,p5*

3) Parameters

p1	Setting or Reporting	s: Set g: Report to host
p2	GPIO Port Mode	0: Off (print without the start signal) 1: Mode1 2: Mode2 3: Mode3 4: Mode4
p3	Print Start Mode	p: Pulse Mode l: Level Mode
p4	Reprint	d: Disable l: Active Low h: Active High
p5	Error on Pause	d: Disable e: Enable

4) Sample

4-1) Setting

- Command: ^gt*s, 0, l, d, d*

4-2) Report setting data to host

- Command: ^gt*g*
- Result:

“0,l,d,d”+ 0x0d + 0x0a

4-2 ^gv

1) Description

GPIO voltage setting or report setting data to host.

*Restart the printer after setting the GPIO voltage.

2) Syntax

^gv*p1,p2*

3) Parameters

p1	Setting or Reporting	s: Set g: Report to host
p2	GPIO voltage	0: 0V 5: 5V 24: 24V

4) Sample

4-1) Setting

- Command: ^gv*s,5*

4-2) Report setting data to host

- Command: ^gv*g*
- Result:

“5”+0x0d + 0x0a